Translation of the Original Operating Manual

For professional use.
Always follow the information in this manual, particularly the safety instructions and the warning instructions. Store the manual in a safe place.

Version 05/2018

GA 4000ACEC-R
GA 4000ACEC-S
GA 4000ACEC Fanuc robot

AirCoat
Automatic spray gun

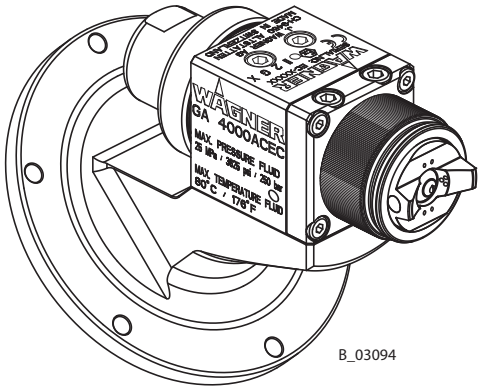

B_03094

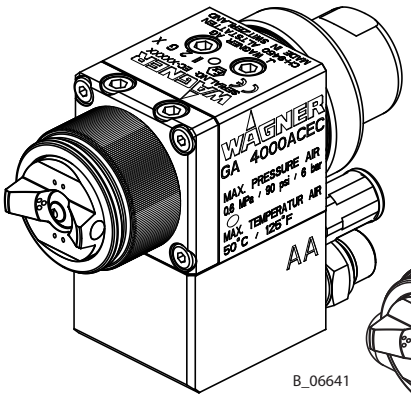

B_06641

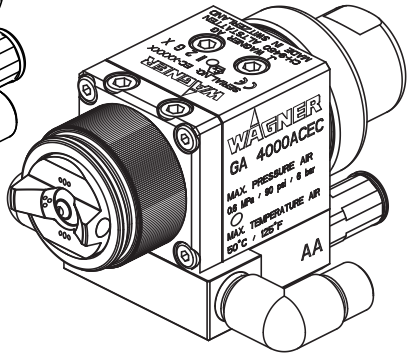

CE Ex II 2G X

Table of Contents

1	**ABOUT THESE INSTRUCTIONS**	**6**
1.1	Preface	6
1.2	Warnings, Notices and Symbols in these Instructions	6
1.3	Languages	7
1.4	Abbreviations	7
1.5	Terminology for the Purpose of this Manual	8
2	**CORRECT USE**	**9**
2.1	Device Type	9
2.2	Type of Use	9
2.3	For Use in Potentially Explosive Areas	9
2.4	Processible Working Materials	9
2.5	Misuse	9
3	**IDENTIFICATION**	**10**
3.1	Explosion Protection Identification	10
3.2	Identification "X"	10
3.3	Type plate	11
4	**BASIC SAFETY INSTRUCTIONS**	**12**
4.1	Safety Instructions for the Operator	12
4.1.1	Electrical Devices and Equipment	12
4.1.2	A Safe Work Environment	13
4.1.3	Personnel Qualifications	13
4.2	Safety Instructions for the Personnel	14
4.2.1	Personal Safety Equipment	14
4.2.2	Safe Handling of WAGNER Spray Devices	15
4.2.3	Grounding the Unit	15
4.2.4	Product hoses	16
4.2.5	Cleaning and Flushing	17
4.2.6	Touching Hot Surfaces	18
4.2.7	Maintenance and Repair	18
4.2.8	Protective and Monitoring Equipment	18
5	**DESCRIPTION**	**19**
5.1	Components	19
5.2	Functional Description	20
5.2.1	Mode of Operation	20
5.2.2	Mode "NC" and "C"	21
5.2.3	Spraying procedure	22
5.3	Included Items	23
5.3.1	Type description	23
5.3.2	Overview	24
5.3.3	Standard variant	25
5.3.4	Supplementary components	25
5.4	Data	28
5.4.1	Materials of Paint-wetted Parts	28
5.4.2	Technical data	28
5.4.3	Measurements and connections	29

6	**COMMISSIONING**	**32**
6.1	Training of Assembly/Commissioning Personnel	32
6.2	Storage Conditions	32
6.3	Installation Conditions	32
6.4	Installation and Connection	32
6.4.1	Typical AirCoat spraying system	33
6.4.2	Ventilation of the Spray Booth	34
6.4.3	Air Supply Lines	34
6.4.4	Product supply lines	34
6.5	Grounding	34
6.6	Safety Checks	34
6.7	Lacquer Preparations	34
6.7.1	Viscosity conversion table	35
6.8	Commissioning	36
6.8.1	Preparation Before Commissioning	36
6.8.2	Commissioning	36
6.8.3	Verifying a Safe Operational Condition	36
7	**OPERATION**	**37**
7.1	Training the Operating Personnel	37
7.2	Tasks	37
7.2.1	Starting to Spray with the AirCoat	37
7.2.2	Adjusting the spray pattern	38
7.2.3	Pressure Relief/Work Interruption	38
7.2.4	Changing AirCoat nozzle	39
7.2.5	Cleaning AirCoat nozzle	39
7.2.6	Eliminating Nozzle Clogging	40
7.2.7	Replacing nozzle insert of round jet nozzle	41
8	**CLEANING AND MAINTENANCE**	**42**
8.1	Cleaning	42
8.1.1	Cleaning Personnel	42
8.1.2	Flushing and Cleaning the Gun	42
8.2	Maintenance	43
8.2.1	Maintenance Personnel	43
8.2.2	Maintenance Instructions	43
8.2.3	Safety Checks	44
8.2.4	Replacing the paint hose	45
8.2.5	Replacing the nozzle seal	45
8.2.6	Replacing the Sealing Fitting of the Round Jet Nozzle	46
9	**TROUBLESHOOTING AND RECTIFICATION**	**47**
10	**REPAIR WORK**	**48**
10.1	Repair Personnel	48
10.2	Repair Notes	48
10.3	Replacing parts of the gun body	49
10.3.1	Disassembly GA 4000ACEC	49
10.3.2	Packing insert GA 4000AC (RP)	51
10.3.3	Assembling of GA 4000ACEC	53

11 FUNCTION TEST AFTER REPAIR WORK 55

12 DISPOSAL 55

13 ACCESSORIES 56
13.1 AirCoat Nozzles ACF3000 56
13.2 AirCoat Nozzle sets complete ACF3000 S2 (4 pieces) 58
13.3 Round jet nozzle attachment 58
13.3.1 RXX Nozzle inserts 59
13.3.2 Nozzle screw joint, complete 59
13.4 Hoses 59
13.5 Miscellaneous 60

14 SPARE PARTS 61
14.1 How can spare parts be ordered? 61
14.2 Spare Parts List for GA 4000ACEC 62
14.3 Spare Parts List for GA 4000ACEC Robot 65
14.4 Service sets and spare parts groups 67
14.5 Packing insert GA 4000AC (RP) 67
14.6 Sealing Set GA 4000 Packing RP and RP Special 68

15 DECLARATION OF CONFORMITY 69
15.1 EU Declaration of Conformity 69

1 ABOUT THESE INSTRUCTIONS

1.1 PREFACE

The operating manual contains information about safely operating, maintaining, cleaning and repairing the device.
The operating manual is part of the device and must be available to the operating and service personnel.
The device may only be operated by trained personnel and in compliance with this operating manual.
Operating and service personnel should be instructed according to the safety instructions.
This equipment can be dangerous if it is not operated according to the instructions in this operating manual.

1.2 WARNINGS, NOTICES AND SYMBOLS IN THESE INSTRUCTIONS

Warning instructions in this manual highlight particular dangers to users and to the device and state measures for avoiding the hazard. These warning instructions fall into the following categories:

⚠ **DANGER**	Immediate risk of danger. Non-observance will result in death or serious injury.
⚠ **WARNING**	Potential risk. Non-observance may result in death or serious injury.
⚠ **CAUTION**	Potentially hazardous situation. Non-observance may result in minor injury.
ⓘ **NOTICE**	Potentially hazardous situation. Non-observance may result in damage to property.
Notice	Provides information about particular characteristics and how to proceed.

Explanation of warning notice:

⚠ **LEVEL OF DANGER**

This notice warns you of a hazard!
Possible consequences of not observing the warning notice.
→ The measures for preventing the hazard and its consequences.

1.3 LANGUAGES

The operating manual is available in the following languages:

Language	Order no.
German	2311056
English	2311057
French	2311058
Italian	2311059
Spanish	2311060

Language	Order no.
Swedish	2316799
--	--
--	--
--	--
--	--

Additional languages on request or at: www.wagner-group.com

1.4 ABBREVIATIONS

Order no.	Order number
ET	Spare part
K	Marking in the spare parts lists
Pos	Position
Stk	Number of pieces
SW	Wrench size (tool)
TX	Torx size (tool)
RP	Replaceable Packing (replaceable packing)
PTFE	Polytetrafluorethylene (PTFE)
GF	Fiber optics
PE	Polyethylene
UWMW-PE	Ultra-high molecular polyethylene
FPM	Fluoropolymer rubber (Viton)
POM	Polyoxymethylene (Acetal)
PA	Polyamide

1.5 TERMINOLOGY FOR THE PURPOSE OF THIS MANUAL

Cleaning	
Cleaning	Manual cleaning of devices and device parts with cleaning agent
Flushing	Internal flushing of paint-wetted parts with compressed air
Product pressure generator	Pump or pressure tank
Personnel qualifications	
Trained person	Is instructed in the tasks assigned to him/her, the potential risks associated with improper behavior as well as the necessary protective devices and measures.
Electrically trained person	Is instructed by an electrician about the tasks assigned to him/her, the potential risks associated with improper behavior as well as the necessary protective devices and measures.
Electrician	Can assess the work assigned to him/her and detect possible hazards based on his/her technical training, knowledge and experience in relevant provisions.
Skilled person in accordance with TRBS 1203 (2010/Revision 2012)	A person, who, based on his/her technical training, experience and recent vocational experience, has sufficient technical knowledge in the areas of explosion protection, protection from pressure hazards and electric hazards (if applicable) and is familiar with the relevant and generally accepted rules of technology so that he/she can inspect and assess the status of devices and coating systems based on workplace safety.

2 CORRECT USE

2.1 DEVICE TYPE

Automatic gun for automatic coating of work pieces.

2.2 TYPE OF USE

The gun is suitable for atomizing liquid products, particularly coating products, using the AirCoat process.
WAGNER explicitly prohibits any other use!
The device may only be operated under the following conditions:

- → Use the device only to work with the products recommended by WAGNER.
- → Only operate the device as a whole.
- → Do not deactivate safety fixtures.
- → Use only WAGNER original spare parts and accessories.
- → The operating personnel must be trained on the basis of this operating manual.
- → Follow the instructions in the operating manual.

2.3 FOR USE IN POTENTIALLY EXPLOSIVE AREAS

The device is suitable for use in potentially explosive areas as defined in Directive 2014/34/EU, (see Explosion protection marking Chapter 3.1).

2.4 PROCESSIBLE WORKING MATERIALS

Top-coat lacquers, primer paints, corrosion protection, textured lacquers, lyes, staining solvents, clear lacquers, separating agents, etc. with a solvent or water base. If you want to spray working materials other than the aforementioned, contact a WAGNER representative.

When operating the device with a coating product with a temperature of > 43 °C; 109.4 °F, identify the device with a warning label that says "Warning - hot surface" according to Chapter 4.2.6.

Note:
Contact your local WAGNER dealer and the lacquer manufacturer if you encounter application problems.

2.5 MISUSE

Misuse can lead to physical injury and/or property damage!
Special attention must be paid that:

- → no dry coating products, e.g. powder are processed;
- → no food, medicine or cosmetics are processed.

3 IDENTIFICATION

3.1 EXPLOSION PROTECTION IDENTIFICATION

As defined in the Directive 2014/34/EU (ATEX), the device is suitable for use in potentially explosive areas.

Device type:	AirCoat automatic gun
Manufacturer:	Wagner International AG 9450 Altstätten Switzerland

II 2G X

CE	European Communities
Ex	Symbol for explosion protection
II	Device class II
2	Category 2 (zone 1)
G	Ex-atmosphere gas
X	Special notice

3.2 IDENTIFICATION "X"

The maximum surface temperature corresponds to the permissible product temperature. This and the permissible ambient temperature can be found in the "Technical Data" chapter.

Safe Handling of WAGNER Spray Devices
Mechanical sparks can form if the device comes into contact with metal.

In an explosive atmosphere:

→ Do not knock or push the device against steel or rusty iron.
→ Do not drop the spray gun.
→ Use only tools that are made of a permitted material.

Ignition temperature of the coating product

→ Ensure that the ignition temperature of the coating product is above the maximum surface temperature.

Medium supporting atomizing

→ To atomize the product, use only weakly oxidizing gases, e.g., air.

Cleaning
If there are deposits on the surfaces, the device may form electrostatic charges. Flames or sparks can form during discharge.

→ Remove deposits from the surfaces to maintain conductivity.

3.3 TYPE PLATE

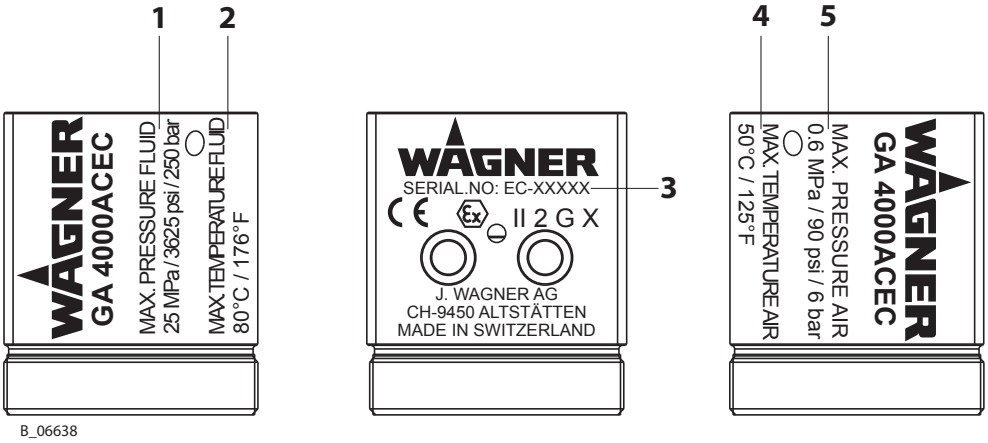

B_06638

Pos	Designation
1	Maximum product pressure
2	Maximum product temperature
3	Serial number
4	Maximum air temperature
5	Maximum air inlet pressure

4 BASIC SAFETY INSTRUCTIONS

4.1 SAFETY INSTRUCTIONS FOR THE OPERATOR

→ Keep this operating manual at hand near the device at all times.
→ Always follow local regulations concerning occupational safety and accident prevention.

4.1.1 ELECTRICAL DEVICES AND EQUIPMENT

Electric shock hazard!
Danger to life from electric shock.
→ Prepare device in accordance with the local safety requirements with regard to the operating mode and ambient influences.
→ May only be maintained by skilled electricians or under their supervision. With open housings, the mains voltage poses a danger.
→ Operate device in accordance with the safety regulations and electrotechnical regulations.
→ Must be repaired immediately in the event of problems.
→ Decommission if it poses a hazard or is damaged.
→ Must be de-energized before work is commenced. Inform personnel about planned work. Observe electrical safety regulations.
→ Ground all devices to a common grounding point.
→ Only operate the device with a properly installed socket with a protective ground wire connection.
→ Keep liquids away from electrical devices.

4.1.2 A SAFE WORK ENVIRONMENT

Hazard due to dangerous fluids or vapors!
Severe or fatal injuries due to explosion hazard or inhalation, swallowing or contact with the skin or eyes.

- → Ensure that the floor in the working are is static dissipative in accordance with EN 61340-4-1 (resistance must not exceed 100 MΩ).
- → Paint mist extraction systems/ventilation systems must be fitted on site according to local regulations.
- → Make sure that the ground connection and potential equalization of all system parts are reliable and continuous and can withstand the expected stress (e.g. mechanical stress, corrosion).
- → Ensure that product/air hoses that have been adapted to the working pressure are used.

- → Ensure that personal protective equipment (see Chapter 4.2.1) is available and is used.
- → Ensure that all persons within the working area wear static dissipative shoes. Footwear must comply with EN 20344. The measured insulation resistance must not exceed 100 MΩ.
- → Protective clothing, including gloves, must comply with EN 1149-5. The measured insulation resistance must not exceed 100 MΩ.
- → Ensure that there are no ignition sources such as naked flames, sparks, glowing wires, or hot surfaces in the vicinity. No smoking.
- → Ensure that the pipe joints, hoses, equipment parts and connections are permanently, technically leak-proof:
  - – Periodic preventative maintenance and service (replacing hoses, checking tightness of connections, etc.).
  - – Regular monitoring of leaks and defects via visual inspection and odor testing, e.g. daily before commissioning, at the end of work or weekly.
- → In the event of defects, immediately bring the device or system to a stop and arrange to have repairs carried out immediately.

4.1.3 PERSONNEL QUALIFICATIONS

Hazard due to incorrect use of device!
Risk of death due to untrained personnel.

- → Ensure that the operating personnel has been instructed by the operator in accordance with the operating manual and the operating instructions. The device must only be operated, maintained and repaired by trained personnel. Refer to the operating instructions for information about the required personnel qualifications.

4.2 SAFETY INSTRUCTIONS FOR THE PERSONNEL

→ Always follow the information in this manual, particularly the safety instructions and the warning instructions.
→ Always follow local regulations concerning occupational safety and accident prevention.
→ In electrostatics applications: Persons belonging to a risk group according to EMF guideline 2013/35/EU (e.g., carriers of active implants), must not enter the high-voltage area.

4.2.1 PERSONAL SAFETY EQUIPMENT

Hazard due to dangerous fluids or vapors!
Serious or fatal injuries due to inhalation, swallowing or contact with the skin or eyes.
→ When preparing or working with lacquer and when cleaning the device, follow the working instructions of the manufacturer of the lacquers, solvents, and cleaning agents being used.
→ Take the specified protective measures. In particular wear safety goggles, protective clothing and gloves, as well as hand protection cream if necessary.
→ Use a mask or breathing apparatus if necessary.
→ For sufficient health and environmental safety: Operate the device in a spray booth or on a spraying wall with the ventilation (extraction) switched on.
→ Wear suitable protective clothing when working with hot products.

4.2.2 SAFE HANDLING OF WAGNER SPRAY DEVICES

Hazard due to injection of lacquer or flushing agent into the skin!
The spray jet is under pressure and can cause dangerous injuries. Avoid injection of lacquer or flushing agents:

- → Never point the spray gun at people.
- → Never reach into the spray jet.
- → Before any work on the device, in the event of work interruptions and malfunctions:
  - – Switch off the energy/compressed air supply.
  - – Relieve the pressure from the spray gun and device.
  - – Secure the spray gun against actuation.
  - – Disconnect the control unit from the mains.
  - – In the event of functional faults: remedy the fault as described in the "Troubleshooting" chapter.
- → If necessary or at least every 12 months, the liquid ejection devices must be checked for safe working conditions by an expert (e.g. WAGNER Service Technician) in accordance with the guidelines for liquid ejection devices (DGUV [German Statutory Accident Insurance] regulation 100-500 section 2.29 and 2.36).
  - – For shut down devices, the examination can be suspended until the next start-up.
- → Carry out the work steps as described in the "Pressure relief" chapter:
  - – if pressure relief is required,
  - – if the spraying work is interrupted or stopped.
  - – before the device is cleaned on the outside, checked, or serviced,
  - – before the spray nozzle is installed or cleaned.

In the event of skin injuries caused by lacquer or flushing agents:

- → Note the lacquer or flushing agent that you have been using.
- → Consult a doctor immediately.

4.2.3 GROUNDING THE UNIT

Hazard due to electrostatic charge!
Explosion hazard and damage to the device.
Friction, flowing liquids and air or electrostatic coating processes create charges. Flames or sparks can form during discharge.
Correct grounding of the entire spraying system prevents electrostatic charges.

- → Ensure that the unit is grounded for every spraying operation.
- → Ground the work pieces to be coated.
- → Ensure that all persons inside the working area are grounded, e.g., that they are wearing static dissipative shoes.
- → The spray substance supply (spray substance tank, pump, etc.) must be grounded.

4.2.4 PRODUCT HOSES

Hazard due to bursting of product hose!

The product hose is under pressure and may cause dangerous injuries.

- → Ensure that the hose material is chemically resistant to the sprayed products and the flushing agents used.
- → Ensure that the product hose and the fittings are suitable for the pressure generated.
- → Ensure that the following information can be seen on the high-pressure hose:
  - – manufacturer,
  - – permissible operating pressure,
  - – date of manufacture.
- → Make sure that the hoses are laid only in suitable places. Hoses should not be laid in the following places under any circumstances:
  - – in high-traffic areas,
  - – on sharp edges,
  - – on moving parts or
  - – on hot surfaces.
- → Ensure that the hoses are never run over by vehicles (e.g., fork lift trucks), or that the hoses are never put under pressure from the outside in any other way.
- → Ensure that the hoses are never kinked. Observe maximum bending radii.
- → Ensure that no work is ever performed with a damaged hose.
- → Make sure that the hoses are never used to pull or move the equipment.
- → The electrical resistance of the product hose, measured at both valves, must be less than 1 MΩ.
- → Suction hoses may not be subjected to pressure.

4.2.5 CLEANING AND FLUSHING

Hazard due to cleaning and flushing!

Explosion hazard and damage to the device.

- → Preference should be given to non-ignitable cleaning and flushing agents.
- → When carrying out cleaning work with flammable cleaning agents, make sure that all equipment and resources (e.g., collection tank, funnel, transport cart) are conductive or static dissipative and grounded.
- → Observe the specifications of the lacquer manufacturer.
- → Ensure that the flash point of the cleaning agent is at least 15 K above the ambient temperature or that cleaning is undertaken at a cleaning station with technical ventilation.

- → Explosive gases are produced when aluminum comes into contact with halogenated hydrocarbons. To clean aluminum, do not use liquids containing halogenated hydrocarbons.
- → Take measures for workplace safety (see Chapter 4.1.2).
- → When commissioning or emptying the device, please note that:
  - – depending upon the coating product used,
  - – depending on the flushing agent (solvent) used.

  an explosive mixture may temporarily exist inside the lines and components of equipment.
- → Only electrically conductive tanks may be used for cleaning and flushing agents.
- → The tanks must be grounded.

An explosive gas/air mixture forms in closed tanks.

- → Never spray into a closed tank when using solvents for flushing.

External Cleaning

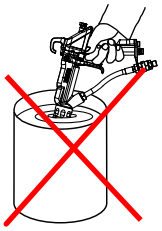

When cleaning the exterior of the device or its parts, also observe the following:

- → Relieve the pressure from the device.
- → De-energize the device electrically.
- → Disconnect the pneumatic supply line.
- → Use only moistened cloths and brushes. Never use abrasive agents or hard objects and never spray cleaning agents with a gun. Cleaning the device must not damage it in any way.
- → Ensure that no electric component is cleaned with or immersed into solvent.

4.2.6 TOUCHING HOT SURFACES

Hazard due to hot surfaces because of hot coating products!
Risk of burn injuries.

- → Only touch hot surfaces if you are wearing protective gloves.
- → When operating the device with a coating product with a temperature of > 43 °C; 109 °F:
  - – Identify the device with a warning label "Warning – hot surface".
  Order no.
  9998910 Instruction label
  9998911 protection label
  Note: Order the two stickers together.

4.2.7 MAINTENANCE AND REPAIR

Hazard due to improper maintenance and repair!
Danger to life and equipment damage.

- → Only a WAGNER service center or a suitably trained person may carry out repairs and replace parts.
- → Do not change or modify the device; if change is necessary, contact WAGNER.
- → Only repair and replace parts that are listed in Chapter 13 and Chapter 14 that are assigned to the unit.
- → Do not use any defective components.
- → Exclusively use accessories listed in Chapter 13 and that are assigned to the unit.
- → Before all work on the device and in the event of work interruptions:
  - – Switch off the energy and compressed air supply.
  - – Relieve the pressure from the spray gun and device.
  - – Secure the spray gun against actuation.
- → Observe the operating and service manual for all work.

4.2.8 PROTECTIVE AND MONITORING EQUIPMENT

Hazard due to removal of protective and monitoring equipment!
Danger to life and equipment damage.

- → Protective and monitoring equipment must not be removed, modified or rendered unusable.
- → Regularly check for perfect functioning.
- → If defects are detected on protective and monitoring equipment, the system must not be operated until these defects are remedied.

5 DESCRIPTION

5.1 COMPONENTS

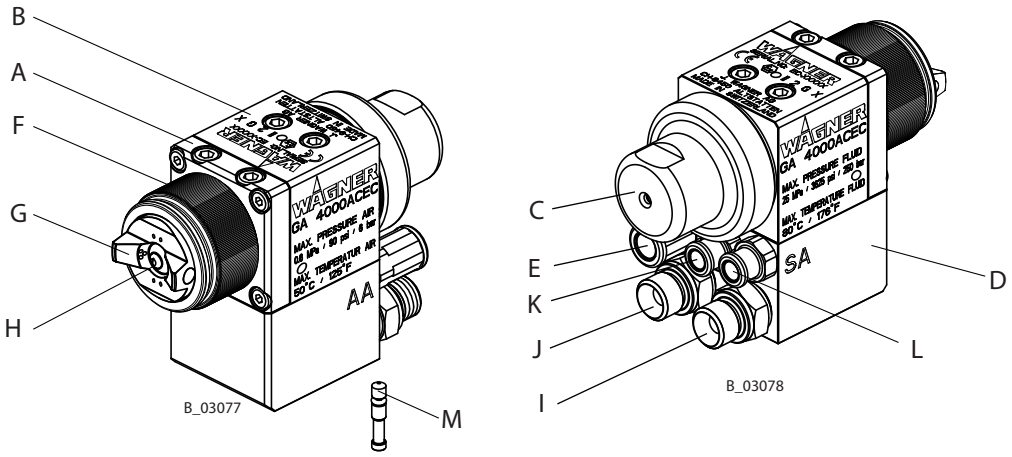

Pos	Designation
A	Gun head
B	Spray gun body
C	Tension sleeve drive
D	Base plate
E	Atomizing air connection (blue)
F	Union nut
G	Air cap (blue, red or bronze)
H	Nozzle
I	Connecting fitting (product)
J	Connecting fitting (product)
K	Connection for control air (red)
L	Shaping air connection (green)
M	Product channel lock pin

The device consists of a gun head (A), gun body (B), drive (C) and base plate (D). The air cap (G), appropriate nozzle (H) and various parts for sealing and fastening are attached to the gun head (A). The product valve and packing are housed in the gun head (A). The clamping mechanism for the packing is installed in the gun body (B). The gun body also serves as a connecting piece between the drive (C) and the gun head (A). The drive (C) consists a diaphragm and a pressure spring for the product valve. The base plate (D) contains all links (I, J, K, L). It can be used to connect the gun to the corresponding reciprocator or gun holder.

5.2 FUNCTIONAL DESCRIPTION

5.2.1 MODE OF OPERATION

Diagram:
SA = Shaping air
AA = Atomizing air
CA = Control air
M = Product
C = Circulation

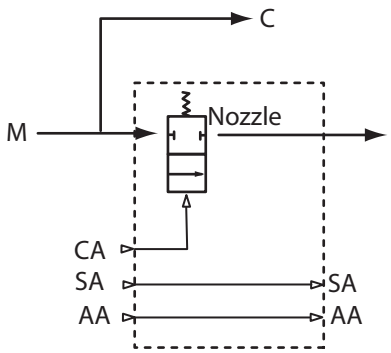

B_00658

Open:
First, the external air valve, which enables the shaping and atomizing air, is opened. The diaphragm in the drive is then charged with control air and moves toward the rear, opening the product valve. In this position, the pressurized coating product is applied to the work piece.

Close:
The diaphragm is relieved, and the product valve closes due to the pressure spring which presses against the product valve tappet.
The air valve is then closed externally.

Additional functions:
The shaping air pressure and the atomizing air pressure are set externally via separate pressure regulators. Both air flows are supplied separately, which allows them to be set separately.
The product connections and the paint channels in the base plate are arranged so that several guns can run in circulation mode.

5.2.2 MODE "NC" AND "C"

⚠ DANGER

Spurting out of liquids with high pressure!

Danger to life and equipment damage.

→ For the operating mode NC (no product circulation), the spray gun may only be connected if the lock pin is installed.

5.2.2.1 MODE "NC" WITHOUT PRODUCT CIRCULATION

In this mode of operation, the left or the right product channel in the gun head (A) is locked by the lock pin (M) and the product entrance (ME) is always on the opposite side.

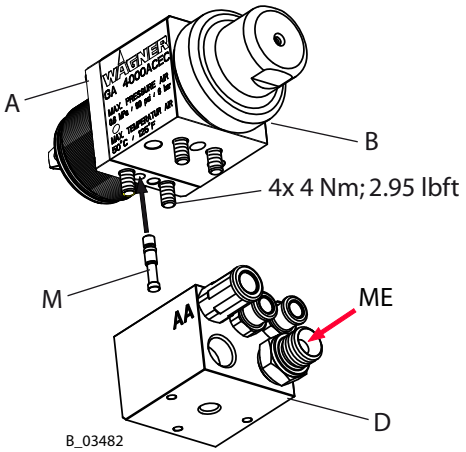

5.2.2.2 MODE "C" WITH PRODUCT CIRCULATION

In this mode of operation, the lock pin (M) must be removed from the left or right product channel in the gun head (A). Screw on additional connection fitting (J). The product entrance (ME) and the product return (MR) are freely selectable in this mode of operation.

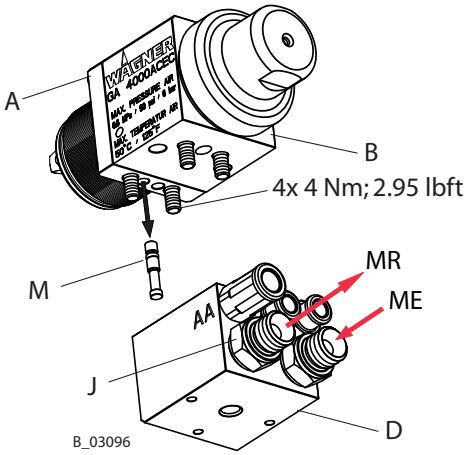

5.2.3 SPRAYING PROCEDURE

5.2.3.1 AIRCOAT FLAT SPRAYING PROCEDURE

For normal applications with the AirCoat flat jet process, the spray product is atomized at a pressure of 3-12 MPa; 30-120 bar; 435-1740 psi. For normal applications, a soft, optimum spray jet is achieved with help of the atomizing air, which has a pressure of 0.05-0.25 MPa; 0.5-2.5 bar; 7.2-36 psi. This eliminates most overlapping problems in the peripheral zones. The shaping air allows the width of the spray jet to be increased or decreased.

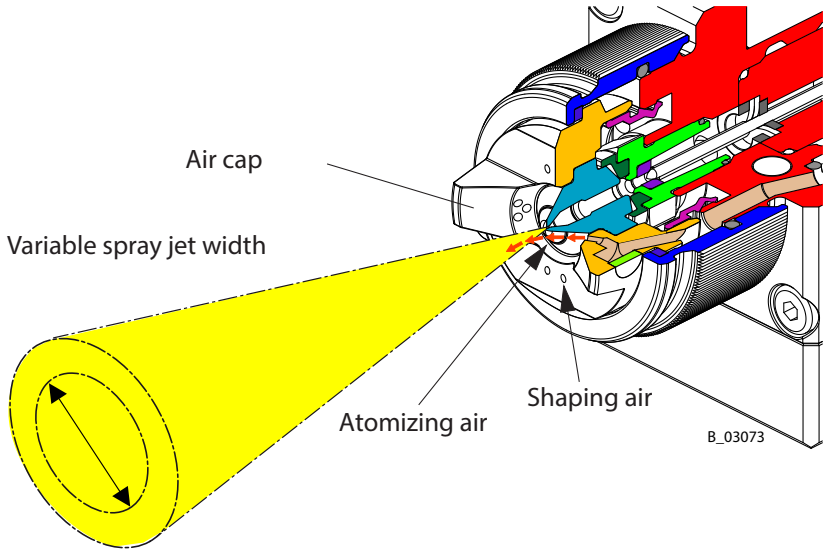

Advantages:

- Large application volume.
- Low fogging tendency.
- Good finish.
- High-viscosity products can easily be applied.
- Jet width adjustment.

5.2.3.2 AIRCOAT ROUND SPRAYING PROCEDURE

For normal applications with the AirCoat round jet process, the spray product is atomized at a pressure of 3-12 MPa; 30-120 bar; 435-1740 psi.
For normal applications, the air at 0.05-0.25 MPa; 0.5-2.5 bar; 7.2-36 psi produces a soft spray jet. The spray jet can be adjusted by turning the nozzle nut.

The multi-channel swirl nozzle produces fine paint particles, while at the same time reducing their forwards speed and swirling them to produce a rotating motion. The result is a soft, extremely well atomized spraying cloud.

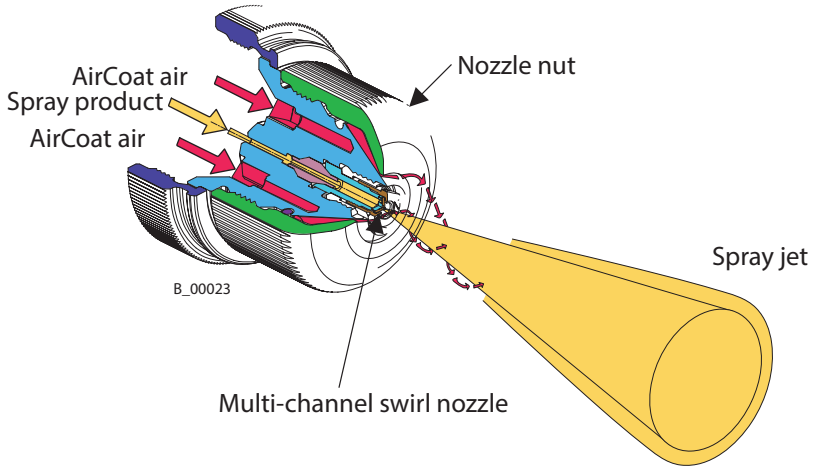

Advantages:
- Large application volume.
- Low fogging tendency.
- Good finish.
- High-viscosity products can easily be applied.

5.3 INCLUDED ITEMS

5.3.1 TYPE DESCRIPTION

GA	4000	AC	XX	XX
①	②	③	④	⑤

① **GA =** Automatic gun
② **4000 =** Gun type
③ **AC =** AirCoat spraying process
④ **IC =** Shaping and atomizing air controlled via valve within gun.
EC = Shaping and atomizing air controlled via valve outside of gun.
⑤ **C =** Circulation operating mode
NC= No circulation operating mode

5.3.2 OVERVIEW

The Aircoat automatic gun is composed of the gun body and supplementary components.
Circulation operating mode is possible.

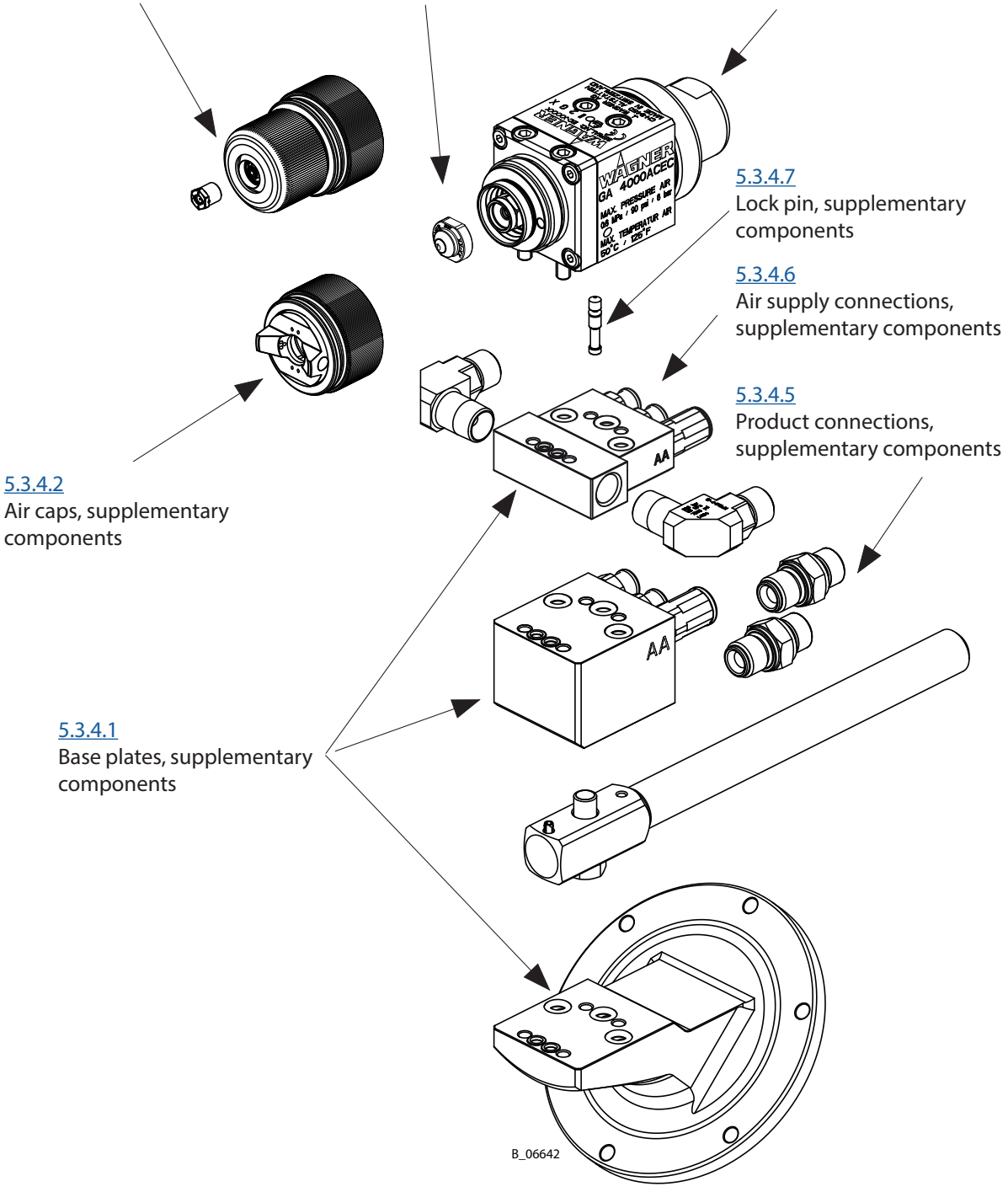

5.3.3 STANDARD VARIANT

Stk	Order no.	Designation
1	2312145	AirCoat automatic gun GA 4000ACEC
1	2338602	AirCoat automatic gun GA 4000ACEC (RP)

The standard equipment includes:

Stk	Order no.	Designation
1	2315627	CE Declaration of Conformity
1	2311056	Operating manual, German
1	See Chap. 1.3	Operating manual in local language

The supplementary components can be used to harmonize and supplement the standard equipment of the automatic gun perfectly to any application depending upon requirements and accessory requests.

The delivery note shows the exact scope of delivery.

5.3.4 SUPPLEMENTARY COMPONENTS

5.3.4.1 BASE PLATE

Order No.	Designation	
2308812	Ground plate, GA 4000ACEC R (including seals and air connections)	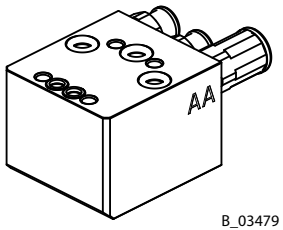 B_03479
2363385	Ground plate GA 4000ACEC S (including seals and air connections)	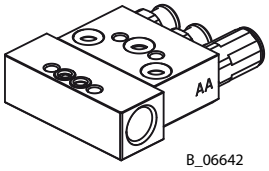 B_06642
2313677	Ground plate, GA 4000ACEC Fanuc Robot (including seals and air connections)	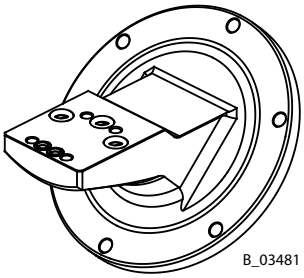 B_03481

5.3.4.2 AIR CAPS

Order no.	Designation	
2308809	Air cap HV plus (blue) for high viscosity products	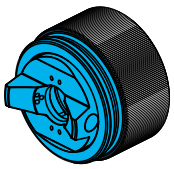 B_03048
2308808	Air cap LV plus (red) for low viscosity products	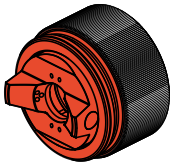 B_03049
2313493	Air cap LA plus (bronze)	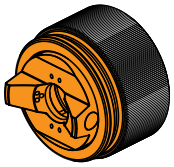 B_03098
2340299	Air cap LV plus (blank)	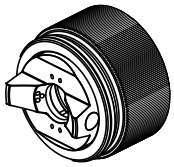 B_04231

5.3.4.3 ACF3000 AIRCOAT FLAT JET NOZZLES

Order no.	Designation	
379XXX	A selection guide for nozzles can be found in Chapter 13	B_00021

5.3.4.4 AIRCOAT ROUND JET NOZZLES ACR3000

Order no.	Designation	
132XXX	A selection guide for nozzles can be found in Chapter 13	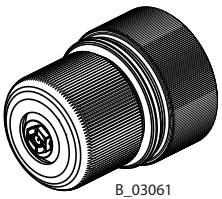 B_03061

5.3.4.5 PRODUCT CONNECTIONS

Order no.	Designation
350550	Straight connecting fitting
2314065	90° connecting fitting; 1/4–NPSM
2328186	90° connecting fitting; G1/4"

B_03074

B_03097

B_06645

5.3.4.6 AIR SUPPLY CONNECTIONS

Order no.	Designation
9998090	Straight threaded fitting ∅ 6 mm–1/8"; ∅ 0.24 inch–1/8" * Standard
9998993	Straight threaded fitting ∅ 8 mm–1/8"; ∅ 5/16"–1/8"

B_00507

B_00508

5.3.4.7 SHUTTER PIN

Order no.	Designation
2310534	Complete lock pin

B_03050

5.3.4.8 PACKING INSERT GA 4000AC

Order no.	Designation
2313516	Packing Insert GA 4000AC
2338601	Packing insert GA 4000AC (RP)

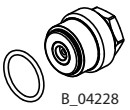
B_04228

5.3.4.9 VALVE MOUNTING

Order no.	Designation
2314279	Valve mounting GA 4000AC complete (80° angle)
2340315	Valve mounting GA 4000AC complete (50° angle)

B_04232

5.4 DATA

5.4.1 MATERIALS OF PAINT-WETTED PARTS

Metals		Plastics	
Carbide	Stainless steel 1.4305	POM	FPM
Stainless steel 1.4310	Stainless steel 1.4104	PTFE	PA 6.6
Aluminum, nickel plated		UHMW-PE	

5.4.2 TECHNICAL DATA

Description	Units	GA 4000ACEC	GA 4000ACEC Fanuc robot
Maximum air inlet pressure	MPa; psi; bar	0.6; 87; 6	
Maximum product pressure	MPa; psi; bar	25; 3625; 250	
Product connection (internal thread)	inch	G1/4"	
Air connection (internal thread)	inch	G1/8"	
Weight	G; oz	760; 26.8	1130; 39.9
Maximum product temperature	°C; °F	80; 176	
Maximum air temperature	°C; °F	50; 122	
Maximum ambient temperature	°C; °F	5–40; 41–104	
Sound level at 0.3 MPa; 3 bar; 43.5 psi air pressure and 11 MPa; 110 bar; 1549 psi product pressure***	dB(A)	82.0	

*** A-rated sound pressure level measured at 0.5 m distance, Lpa 0.5 m, according to DIN EN 14462: 2005.

5.4.3 MEASUREMENTS AND CONNECTIONS

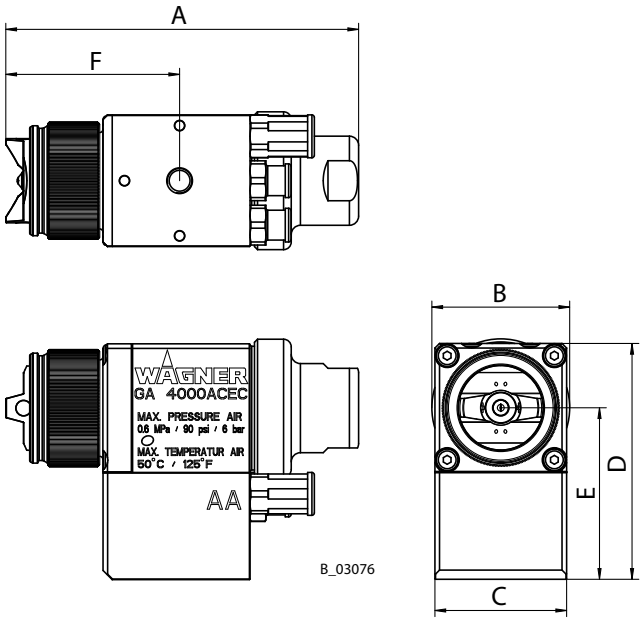

Pos	mm	inch
A	115	4.53
B	45	1.77
C	43	1.69
D	77	3.03
E	56	2.20
F	57	2.24

Connection data:
Ground plate to GA 4000ACEC R

CA =	G1/8" -> 6 mm; 0.24 inch	Control air
AA =	G1/8" -> 8 mm; 0.31 inch	Atomizing air
SA =	G1/8" -> 6 mm; 0.24 inch	Shaping air
M =	G1/4" -> 1/4–NPSM	Product

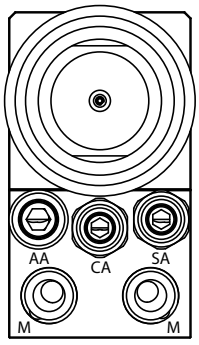

B_3084

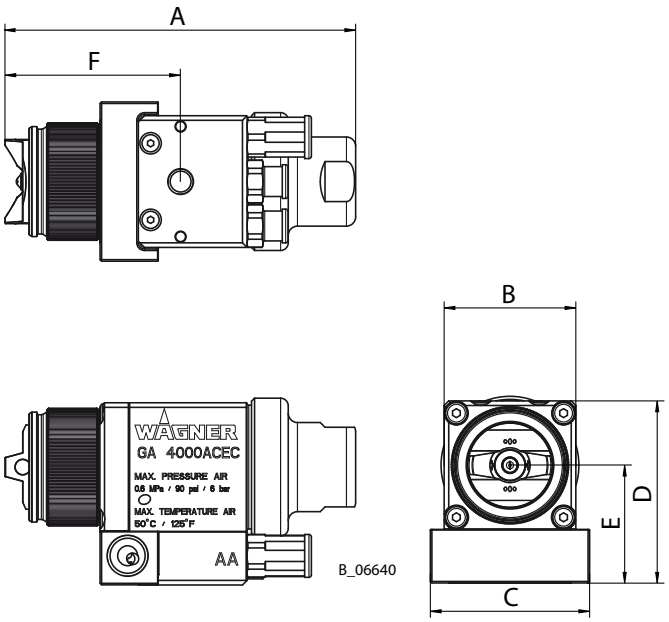

Pos	mm	inch
A	115	4.53
B	45	1.77
C	52	2.05
D	58.5	2.30
E	37.5	1.48
F	57	2.24

Connection data:
Ground plate to GA 4000ACEC S

CA =	G1/8" -> 6 mm; 0.24 inch	Control air
AA =	G1/8" -> 8 mm; 0.31 inch	Atomizing air
SA =	G1/8" -> 6 mm; 0.24 inch	Shaping air
M =	G1/4" -> 1/4–NPSM	Product
M =	G1/4" -> G1/4"	Product

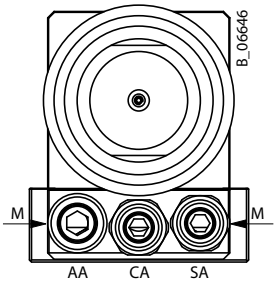

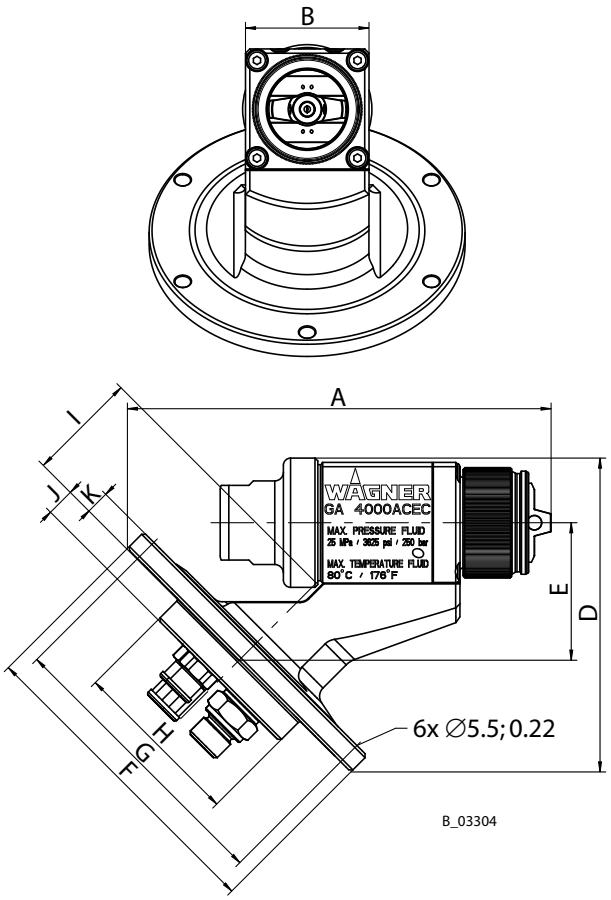

Pos	mm	inch
A	148	5.83
B	43	1.69
D	109	4.29
E	48	1.89
F	110	4.33
G	100	3.94
H	59.8	2.35
I	38	1.50
J	10	0.39
K	8	0.31

Connection data:
Base plate to GA 4000ACEC Fanuc Robot

CA =	G1/8" -> 6 mm; 0.24 inch	Control air
AA =	G1/8" -> 8 mm; 0.31 inch	Atomizing air
SA =	G1/8" -> 6 mm; 0.24 inch	Shaping air
M =	G1/4" -> 1/4–NPSM	Product

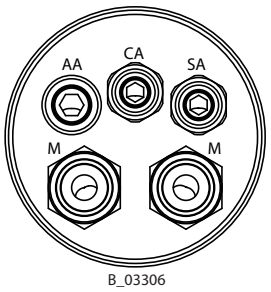

6 COMMISSIONING

6.1 TRAINING OF ASSEMBLY/COMMISSIONING PERSONNEL

→ The assembly and commissioning personnel must have the technical skills to safely commission the device.

→ When assembling, commissioning and carrying out all work, read and follow the operating manuals and safety regulations for the additionally required system components.

A skilled person must check to ensure that the device is in a reliable state after it is installed and commissioned.

6.2 STORAGE CONDITIONS

Until the point of assembly, the device must be stored in a dry location, free from vibrations and with a minimum of dust. The device must be stored in closed rooms.

The air temperature at the storage location must be between -20 °C and +60 °C (-4 °F and +140 °F).

The relative air humidity at the storage location must be between 10 and 95% (without condensation).

6.3 INSTALLATION CONDITIONS

The air temperature at the installation site must lie between 0 °C and 40 °C; 32 °F and 132 °F.

The relative air humidity at the installation site must be between 10 and 95% (without condensation).

6.4 INSTALLATION AND CONNECTION

The spray gun must be combined with various components to make up a spraying system. The spraying system shown in the figure is only one example of an AirCoat spraying system. Your WAGNER distributor would be happy to assist you in creating a spraying system solution that meets your individual needs.
You must familiarize yourself with the operating manuals and the safety regulations of all additional system components before starting commissioning.

6.4.1 TYPICAL AIRCOAT SPRAYING SYSTEM

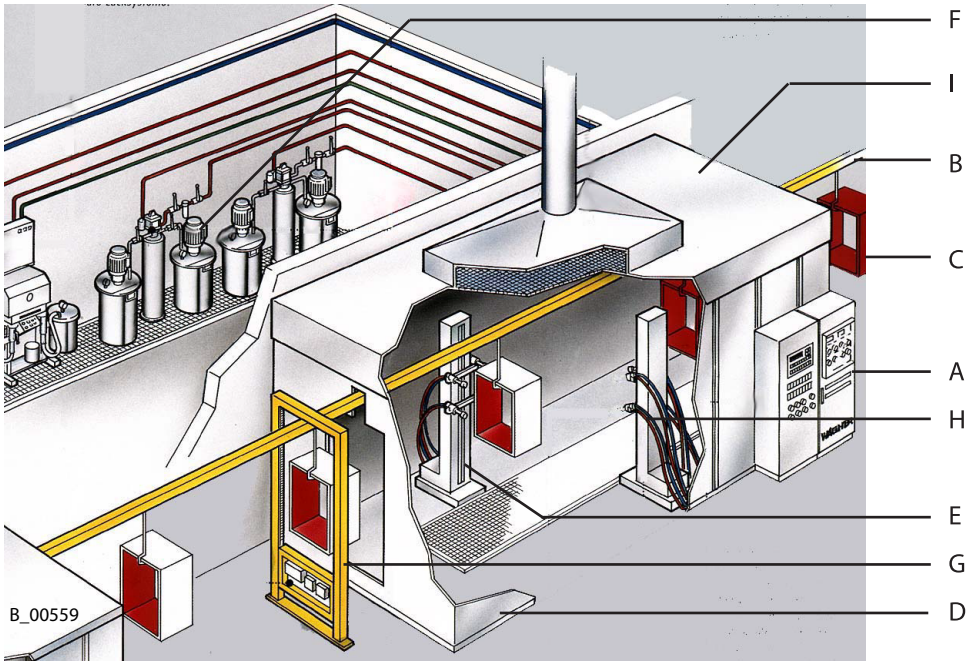

Pos	Designation
A	Control cabinet
B	Conveyor
C	Work piece
D	Spray booth
E	Reciprocator

Pos	Designation
F	Paint supply
G	Part recognition
H	Spray guns
I	Supply air system and exhaust air system

6.4.2 VENTILATION OF THE SPRAY BOOTH

→ Operate the device in a spray booth approved for the working materials.
-or-
→ Operate the device on an appropriate spraying wall with the ventilation (extraction) switched on.
→ Observe national and local regulations for the exhaust air speed.

6.4.3 AIR SUPPLY LINES

Ensure that only dry, clean atomizing air is used in the spray gun! Dirt and moisture in the atomizing air worsens the spraying quality and spray pattern.

6.4.4 PRODUCT SUPPLY LINES

NOTICE

Impurities in the spraying system!
Spray gun blockage, products harden in the spraying system.
→ Flush the spray gun and paint supply with a suitable flushing agent.

6.5 GROUNDING

A conductive connection (potential equalization cable) must be established between original tank and the equipment.

→ Ground all device components.
→ Ground the work pieces to be coated.

6.6 SAFETY CHECKS

→ Carry out safety checks in accordance with Chapter 8.2.3.

6.7 LACQUER PREPARATIONS

The viscosity of the lacquer is of great importance. The best spraying results are obtained with values between 80 and 260 millipascal x Sec (mPas).

Processing of up to 260 mPas is generally possible without problems if high coating thicknesses are required. It is important for the optimum coating quality that the paint temperature is kept constant during coating.

Please also read the technical data sheet of the lacquer for optimal processing, viscosity adjustment and intermixing of the product.
In the case of application problems contact the lacquer manufacturer.

6.7.1 VISCOSITY CONVERSION TABLE

Millipascal x Sec (mPas)	Centipoise	Poise	DIN Cup 4 mm 0.16 inch	Ford Cup 4	Zahn 2
10	10	0.1		5	16
15	15	0.15		8	17
20	20	0.2		10	18
25	25	0.25	14	12	19
30	30	0.3	15	14	20
40	40	0.4	17	18	22
50	50	0.5	19	22	24
60	60	0.6	21	26	27
70	70	0.7	23	28	30
80	80	0.8	25	31	34
90	90	0.9	28	32	37
100	100	1	30	34	41
120	120	1.2	33	41	49
140	140	1.4	37	45	58
160	160	1.6	43	50	66
180	180	1.8	46	54	74
200	200	2	49	58	82
220	220	2.2	52	62	
240	240	2.4	56	65	
260	260	2.6	62	68	
280	280	2.8	65	70	
300	300	3	70	74	
320	320	3.2			
340	340	3.4			
360	360	3.6	80		
380	380	3.8			
400	400	4	90		

6.8 COMMISSIONING

6.8.1 PREPARATION BEFORE COMMISSIONING

NOTICE

Impurities in the spraying system!

Spray gun blockage.

→ Flush the spray gun and paint supply with a suitable flushing agent before commissioning.

6.8.2 COMMISSIONING

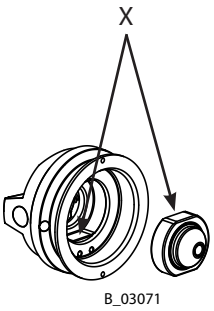

1. Mount spray gun to reciprocator.
2. Connect product hoses (supply and return flow) to spray gun and product supply system.
3. Fit nozzle on nozzle seal. Fit air cap over nozzle.
   Note the flattened parts (X) on the nozzle and in the air cap.
   Fit the union nut and tighten by hand.
4. Connect control air hose and atomizing air hose to spray gun and to oil-free, dry air supply.
5. Visually check the permissible pressures for all the system components.
6. Make sure that the device and all other conductive parts within the work area are grounded.
7. Set operating pressure to 100 MPa; 10 bar; 1,450 psi and use a suitable medium to check no connections are leaking.
8. Relieve the pressure from the spray gun and device.

6.8.3 VERIFYING A SAFE OPERATIONAL CONDITION

A skilled person must check to ensure that the device is in a reliable state after it is installed and commissioned.
This includes:

– Carry out safety checks in accordance with Chapter 8.2.3.

7 OPERATION

7.1 TRAINING THE OPERATING PERSONNEL

→ The operating personnel must be qualified to operate the entire system.

→ The operating personnel must be familiar with the potential risks associated with improper behavior as well as the necessary protective devices and measures.
→ Before work commences, the operating personnel must receive appropriate system training.

7.2 TASKS

⚠ CAUTION

Spurting out of liquids with high pressure!
Risk of injury and damage to the device.
→ No persons should be located in the hazard area during operation.
→ Make sure to keep a safe distance during setting up, installation and maintenance work.

Ensure that:
→ the regular safety checks are carried out in accordance with Chapter 8.2.3,
→ commissioning is carried out in accordance with Chapter 6.8.

7.2.1 STARTING TO SPRAY WITH THE AIRCOAT

1. Set product supply to operating pressure of approx. 8 MPa; 80 bar; 1160 psi and start up.
2. Spray (release control air) and check the atomization.
3. Set the spray pressure on the product supply such that optimum product atomization is attained.
4. Open air pressure regulator for atomizing air and set.
5. Adjust the amount of air at the compressed air regulator for shaping air until the optimum spraying picture is reached.
   The relation between spray pattern and shaping air / atomizing air is shown in the illustration below.

Note:
Repeat points 4 and 5 until the optimum spray pattern is reached (iterative process).

Spray pattern shapes

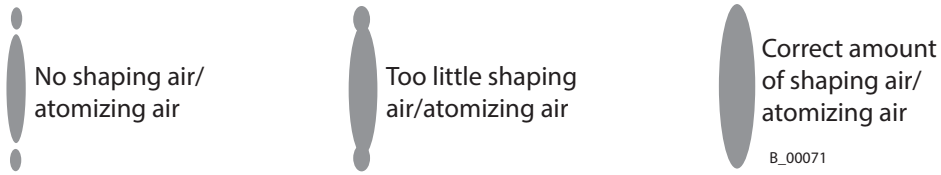

Note:

The flow rate can be changed by:

- changing the product pressure or
- Using a different flat jet nozzle (see Chapter 7.2.4 and Chapter 13).

7.2.2 ADJUSTING THE SPRAY PATTERN

The spray pattern can be adjusted to suit the object being sprayed using the shaping air throttle valve. The illustration shows the influence of the shaping air on the spraying pattern.

Other nozzle sizes can be mainly used to obtain larger or smaller spray patterns.

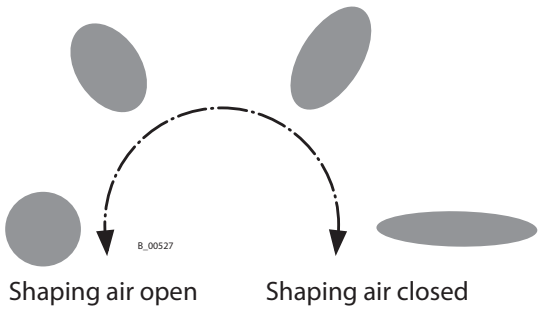

7.2.3 PRESSURE RELIEF/WORK INTERRUPTION

The pressure must always be relieved:

- when the spraying tasks are finished,
- before carrying out maintenance work on the spraying system,
- before carrying out cleaning tasks on the spraying system,
- before moving the spraying system to another location,
- if something must be checked on the spraying system,
- if the nozzle or the filter is removed from the spray gun.

The components for pressure relief on a CE-compliant spray system include:

- Air cock with pressure relief hole mounted between compressed air source and pneumatic pump.
- Product pressure relief valve mounted between pump and spray gun.

Pressure Relief Procedure:

1. Turn compressed air regulator for shaping and atomizing air on the superordinate control to "0".
2. Close the compressed air supply on the material side upon the product pressure generator.
3. Open product pressure relief valve (see system description) and relieve pressure from the system.
4. Leave product pressure relief valve open.

If the pressure is still not completely relieved after this:

– If the nozzle is obstructed: loosen the union nut, remove the air cap and nozzle to release remaining pressure.
– If product hose is obstructed: slowly loosen the hose connections to release the remaining pressure.

Note:
Always follow the procedure described above if pressure relief is specified in the instructions.

7.2.4 CHANGING AIRCOAT NOZZLE

NOTICE

Defective AirCoat nozzle!
Insufficient paint application quality.
→ Do not use sharp-edged objects to treat carbide on the AirCoat nozzle.

1. Relieve the pressure of gun and device.
2. Secure gun (remove the control air hose).
3. Unscrew union nut (A).
4. Remove air cap (B).
5. Press AirCoat nozzle (C) out of air cap (B) by hand and treat with cleaning agent until all remaining paint has been dissolved.

Assembly:

6. Fit AirCoat nozzle (C) in nozzle seal (D).
7. Fit air cap (B) over nozzle (C).
   Note the flattened parts (X) on the nozzle and in the air cap.
8. Fit the union nut with nozzle guard (A) and tighten by hand.

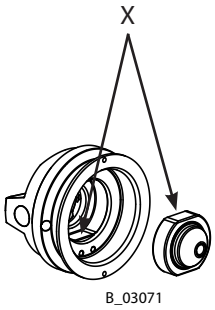

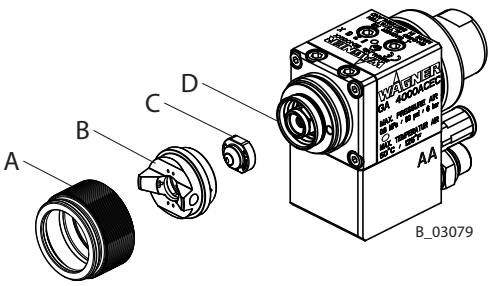

7.2.5 CLEANING AIRCOAT NOZZLE

For disassembly and assembly of AirCoat nozzles, see Chapter 7.2.4.
The AirCoat nozzle (C) can be placed into a cleaning solution which has been recommended by the paint manufacturer.

7.2.6 ELIMINATING NOZZLE CLOGGING

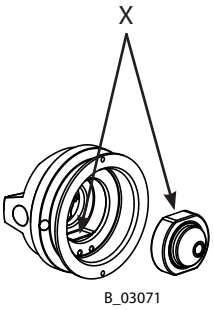

1. Relieve the pressure of gun and device.
2. Secure gun (remove the control air hose).
3. Unscrew union nut (A).
4. Remove air cap (B).
5. Push AirCoat nozzle (C) out of air cap (B) by hand and place on nozzle seal (D) the other way round with the nozzle tip towards the rear.
6. Fit air cap (B) on nozzle (C).
   Note the flattened parts (X) on the nozzle and in the air cap.
7. Screw on the union nut (A) over the air cap (B) onto the spray gun and tighten by hand.
8. Switch the product pressure back on.
9. Spray (connect control air hose).
10. When the blockage has been flushed out, switch off the spray gun.
11. Relieve the pressure of gun and device.
12. Secure gun (remove the control air hose).
13. Unscrew union nut (A).
14. Remove air cap (B) and push AirCoat nozzle (C) out by hand.
    Clean nozzle and nozzle seal and refit nozzle in spraying position on nozzle seal (D).
15. Fit air cap (B) on nozzle (C).
    Note the flattened parts (X) on the nozzle and in the air cap.
16. Screw on the union nut (A) over the air cap (B) onto the spray gun and tighten by hand.
17. Connect control air.
    Switch the product pressure and the air pressure back on.

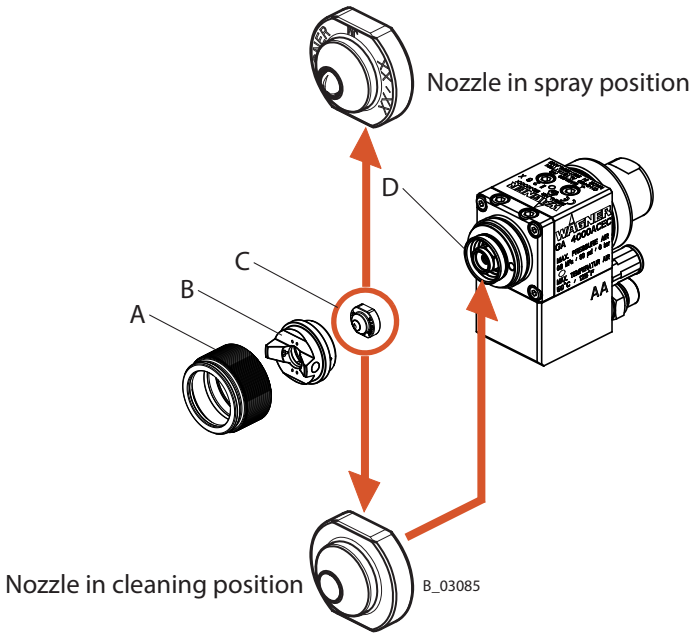

7.2.7 REPLACING NOZZLE INSERT OF ROUND JET NOZZLE

1. Relieve the pressure of gun and device.
2. Secure gun (remove the control air hose).
3. Remove nozzle insert (B) with nozzle spanner (A).
4. Fit new nozzle insert in reverse order (see Chapter 8.2.6).

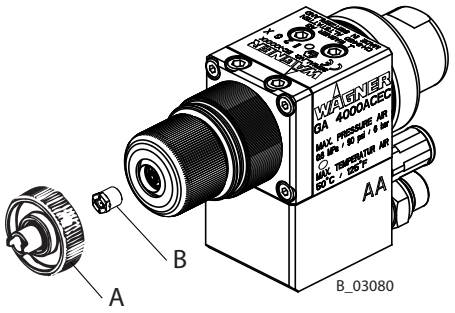

Note:

Flush out clogged round jet nozzle:

1. Use nozzle spanner (A) to loosen nozzle insert (B) by a half turn.
2. Remove the nozzle spanner and switch on the spray gun briefly.
3. After flushing the nozzle, re-tighten the nozzle insert.

8 CLEANING AND MAINTENANCE

8.1 CLEANING

8.1.1 CLEANING PERSONNEL

Cleaning work should be undertaken regularly and carefully by qualified and trained personnel. They should be informed of specific hazards during their training.

The following hazards may arise during cleaning work:

- risk to health from inhaling solvent vapors,
- use of unsuitable cleaning tools and aids.

8.1.2 FLUSHING AND CLEANING THE GUN

ⓘ NOTICE

Flushing agent in the air duct!

Functional faults caused by swollen seals.

→ When cleaning, always operate the spray gun at at least 0.05 MPa; 0.5 bar; 7.25 psi shaping air.
→ Always point the spray gun down when cleaning.
→ Ensure that neither paint nor flushing agent enters the air duct.
→ Never immerse the spray gun in cleaning agent.

The spray gun and the device must be cleaned and flushed daily. The cleaning/flushing agents used for cleaning or flushing must correspond with the working material.

1. Relieve the pressure of gun and device.
2. Secure gun (remove the control air hose).
3. Connect the cleaning agent supply.
4. Dismount AirCoat nozzle and clean separately (see Chapter 7.2.4).
5. Pressurize the cleaning agent supply to a maximum pressure of 4 MPa; 40 bar; 580 psi and thoroughly flush the spray gun.
6. Relieve the pressure of gun and device.
7. Secure gun (remove the control air hose).
8. Clean outside of spray gun with a cleaning agent recommended by the lacquer manufacturer and dry with a cloth or blow gun.

8.2 MAINTENANCE

8.2.1 MAINTENANCE PERSONNEL

Maintenance work should be undertaken regularly and carefully by qualified and trained personnel. They should be informed of specific hazards during their training.

The following hazards may arise during maintenance work:

- risk to health from inhaling solvent vapors,
- use of unsuitable tools and aids.

An authorized person must ensure that the device is checked for being in a reliable state after maintenance work is completed.

8.2.2 MAINTENANCE INSTRUCTIONS

⚠ DANGER

Incorrect maintenance/repair!

Danger to life and equipment damage.

→ Only a WAGNER service center or a suitably trained person may carry out repairs and replace parts.

→ Only repair and replace parts that are listed in the "Spare parts" chapter and that are assigned to the unit.

→ Before all work on the device and in the event of work interruptions:
- Switch off the energy and compressed air supply.
- Relieve the pressure from the spray gun and device.
- Secure the spray gun against actuation.

→ Observe the operating and service manual for all work.

Prior to Maintenance

- Flush and clean the system. → Chapter 8.1.2

After maintenance

- Carry out safety checks in accordance with Chapter 8.2.3.
- Put the system into operation and check for leaks as described in Chapter 6.8.

→ In accordance with the guideline for liquid ejection devices (DGUV regulation 100-500 sections 2.29 and 2.36):
- The liquid ejection devices should be checked by an expert (e.g., WAGNER service technician) for their safe working conditions as required and at minimum every 12 months.
- For shut down devices, the examination can be suspended until the next start-up.

8.2.3 SAFETY CHECKS

8.2.3.1 GROUNDING CHECK

Daily: Before starting work, carry out a visual inspection to ensure that the system is grounded.

8.2.3.2 PRODUCT HOSES, PIPES AND COUPLINGS

The service life of the complete hoses between product pressure generator and application device is reduced due to environmental influences even when handled correctly.

- → Check hoses, pipes, and couplings every day and replace if necessary.
- → Additionally, the operator must regularly check the complete hoses for wear and tear as well as for damage at intervals that he/she has set. Records of these checks must be kept.
- → The complete hose is to be replaced as soon as one of the two following intervals has been exceeded:
  - 6 years from the date of the hose crimping (see fitting embossing).
  - 10 years from the date of the hose imprinting.

Fitting embossing	Meaning
xxx bar	Pressure
yymm	Crimping date (year/month)
XX	Internal code

Hose imprinting	Meaning
Wagner	Name/Manufacturer
yymm	Date of manufacture (year/month)
xxx bar (xx MPa) e.g., 270 bar (27 MPa)	Pressure
XX	Internal code
DNxx (e.g., DN10)	Nominal diameter

8.2.4 REPLACING THE PAINT HOSE

1. Decommissioning work and cleaning.
2. Relieve the pressure of gun and device.
3. Secure gun (remove the control air hose).
4. Place open-ended wrench size 14 mm; 0.55 inch on flats of product connection and counterhold.
5. Unscrew nut of product hose with open-ended wrench size 19 mm; 0.75 inch.
6. **Assembly:**
   Fit product hose by hand and tighten with 2 open-ended wrenches.

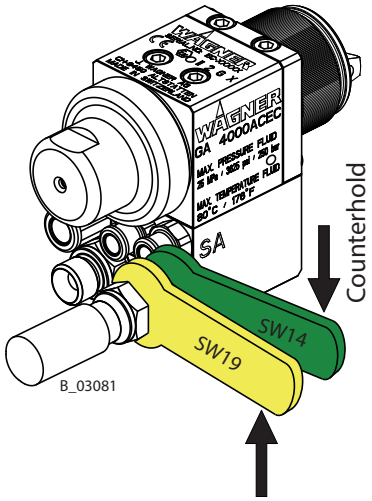

8.2.5 REPLACING THE NOZZLE SEAL

NOTICE

Shaping air and atomizer air not separate!
Poor spray pattern.
Spray jet cannot be adjusted.
→ Treat the distributor seal (F) with care.

1. Decommissioning work and cleaning.
2. Relieve the pressure of gun and device.
3. Secure gun (remove the control air hose).
4. Unscrew union nut (A).
5. Remove air cap (B) and nozzle (C).
6. Release the nozzle seal (D) with the help of a screwdriver.
7. Fit new nozzle seal to valve housing (E).
8. Assemble in reverse order.

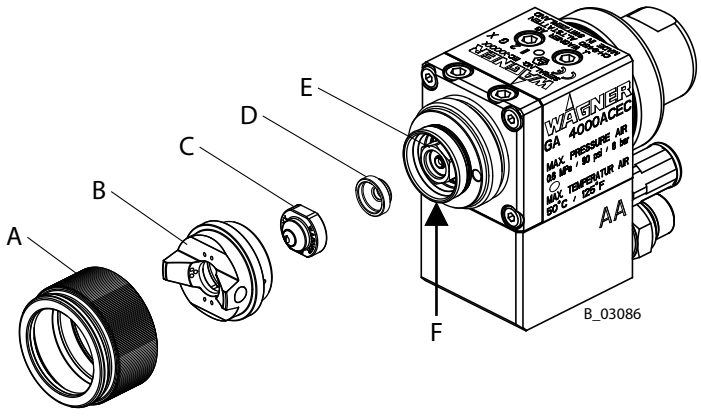

8.2.6 REPLACING THE SEALING FITTING OF THE ROUND JET NOZZLE

NOTICE

Defective nozzle body!
Poor spray pattern.
→ Handle the nozzle body (A) with care.

Unscrew the nozzle by hand.

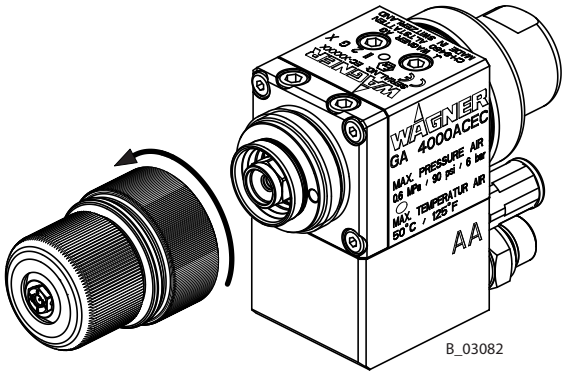

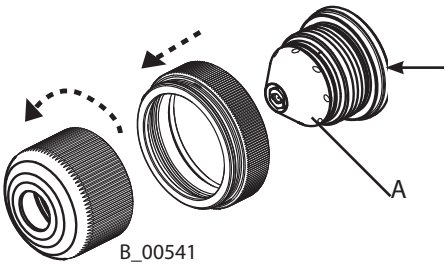

Hold in position with a size 13 mm; 0.51 inch socket wrench.

Nozzle wrench (D) Order No. 128901.

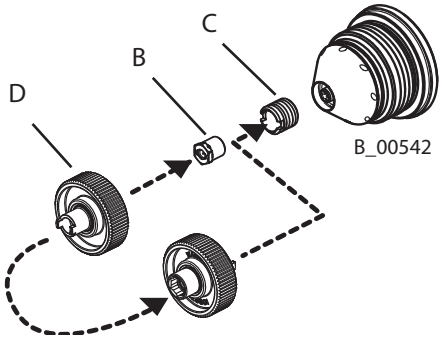

Eject with ∅ 1.5 mm; 0.06 inch pin.

Note:
The sealing fitting (E) can be pulled out of the nozzle body using a small eye wood bolt.

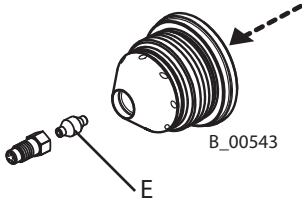

9 TROUBLESHOOTING AND RECTIFICATION

Functional fault	Cause	Remedy	See Chapter
Insufficient product output	Nozzle too small	Select larger nozzle.	13
	Product pressure too low.	Increase product pressure.	
	Filter upstream of gun or high-pressure filter clogged at pump.	Clean or replace filter.	
	Nozzle clogged.	Clean the nozzle.	7.2.6
	The valve rod path is too short.	Increase the control air pressure.	
		Replace the valve rod.	
Poor spray pattern	Atomizing air incorrectly adjusted.	Readjust the atomizing air.	7.2.1
	Nozzle is too large.	Select a smaller nozzle.	
	Nozzle worn.	Replace the nozzle.	7.2.4
	Product pressure too low.	Increase the product pressure at pump.	
	The product viscosity is too high.	Dilute the spray product in accordance with the manufacturer's instructions.	
	Nozzle partially clogged.	Clean the nozzle.	7.2.5and7.2.6
	Incorrectly set shaping air.	Reset shaping air.	
	The drilled holes in the air cap are damaged or clogged.	Clean or replace the air cap.	
	Incorrectly selected air cap.	Use suitable air cap (high viscosity/low viscosity).	
Air valve leaking / air leaks	The seals on the valve rod are damaged or the valve rod itself is damaged.	Replace the entire valve rod or the individual seals.	
	Air valve seals are leaky.	Replace the air valve seal.	8.2.5
Packing leaking.	Packing worn.	Replace packing.	
Spray gun will not shut off correctly/product valve leaking.	The valve seat or the valve ball is damaged.	Replace the parts.	

10 REPAIR WORK

10.1 REPAIR PERSONNEL

Repair work should be undertaken carefully by qualified and trained personnel. They should be informed of specific hazards during their training.

The following hazards may arise during repair work:

- risk to health from inhaling solvent vapors,
- use of unsuitable tools and aids.

A skilled person must check to ensure that the device is in a reliable state after it is repaired.

10.2 REPAIR NOTES

⚠ DANGER

Incorrect maintenance/repair!

Danger to life and equipment damage.

→ Only a WAGNER service center or a suitably trained person may carry out repairs and replace parts.

→ Only repair and replace parts that are listed in the "Spare parts" chapter and that are assigned to the unit.

→ Before all work on the device and in the event of work interruptions:
  - Switch off the energy and compressed air supply.
  - Relieve the pressure from the spray gun and device.
  - Secure the spray gun against actuation.

→ Observe the operating and service manual for all work.

Before Repair Work

- Flush and clean the system according to Chapter 8.1.2.

After Repair Work

- Carry out safety checks in accordance with Chapter 8.2.3.
- Put the system into operation and check for leaks as described in Chapter 6.8.
- Function test in accordance with Chapter 11.

→ In accordance with the guideline for liquid ejection devices (DGUV regulation 100-500 sections 2.29 and 2.36):
  - The liquid ejection devices should be checked by an expert (e.g., WAGNER service technician) for their safe working conditions as required and at minimum every 12 months.
  - For shut down devices, the examination can be suspended until the next start-up.

10.3 REPLACING PARTS OF THE GUN BODY

10.3.1 DISASSEMBLY GA 4000ACEC

NOTICE

Defective plunger shaft!
Packing leaking.
Greater wear on the packing.
→ Handle the plunger shaft (K) with care.
→ The plunger shaft has the function of a sliding surface.

Note:
The complete base plate (B) does not have to be removed.

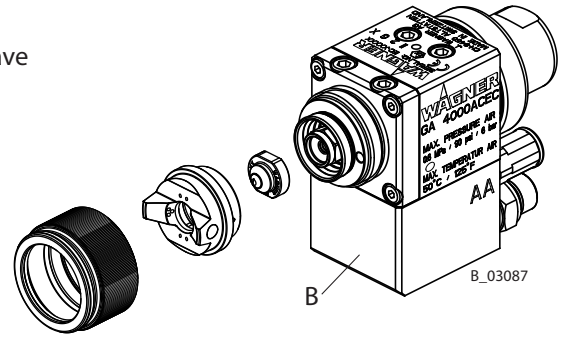

M5 wrench size 3 mm; 0.12 inch

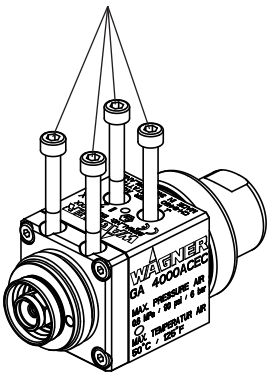

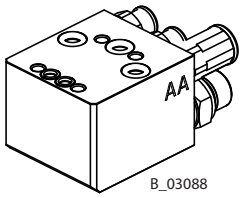

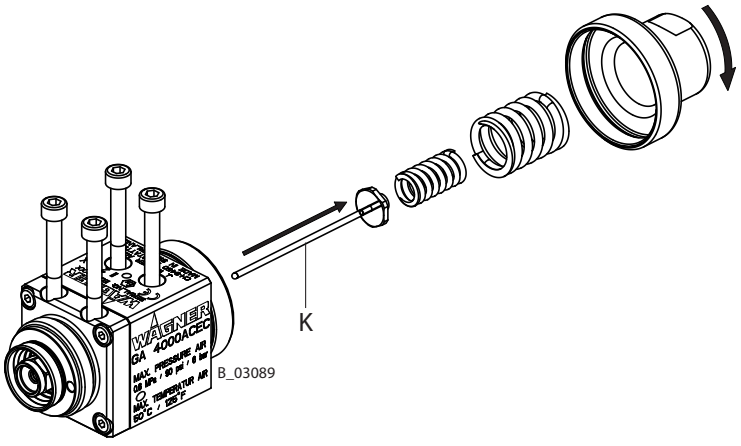

Note:
Circulation mode without lock pin.

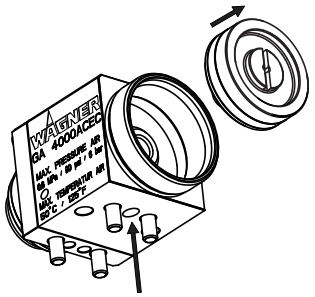

Blow gun

Note:
Stuck components can be pushed out with a drift ∅ 3 mm; 0.12 inch.

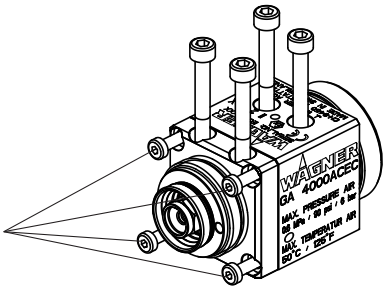

M5 wrench size
3 mm; 0.12 inch

Note:
Pull out distributor seal (F) using pliers.

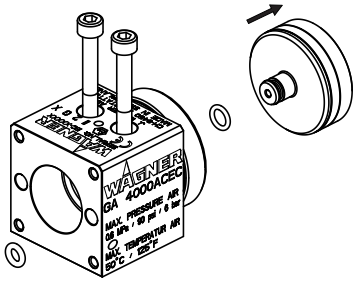

B_03090

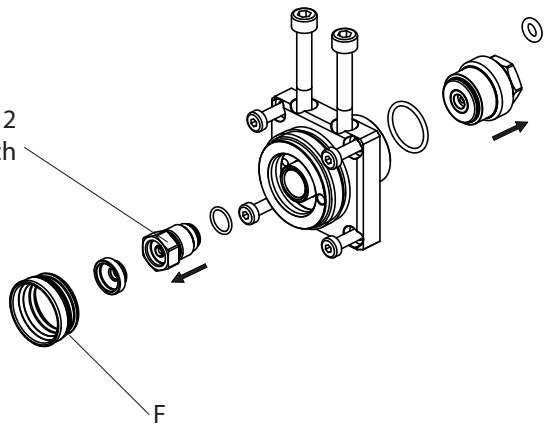

Wrench size 12
mm; 0.47 inch

F

10.3.2 PACKING INSERT GA 4000AC (RP)

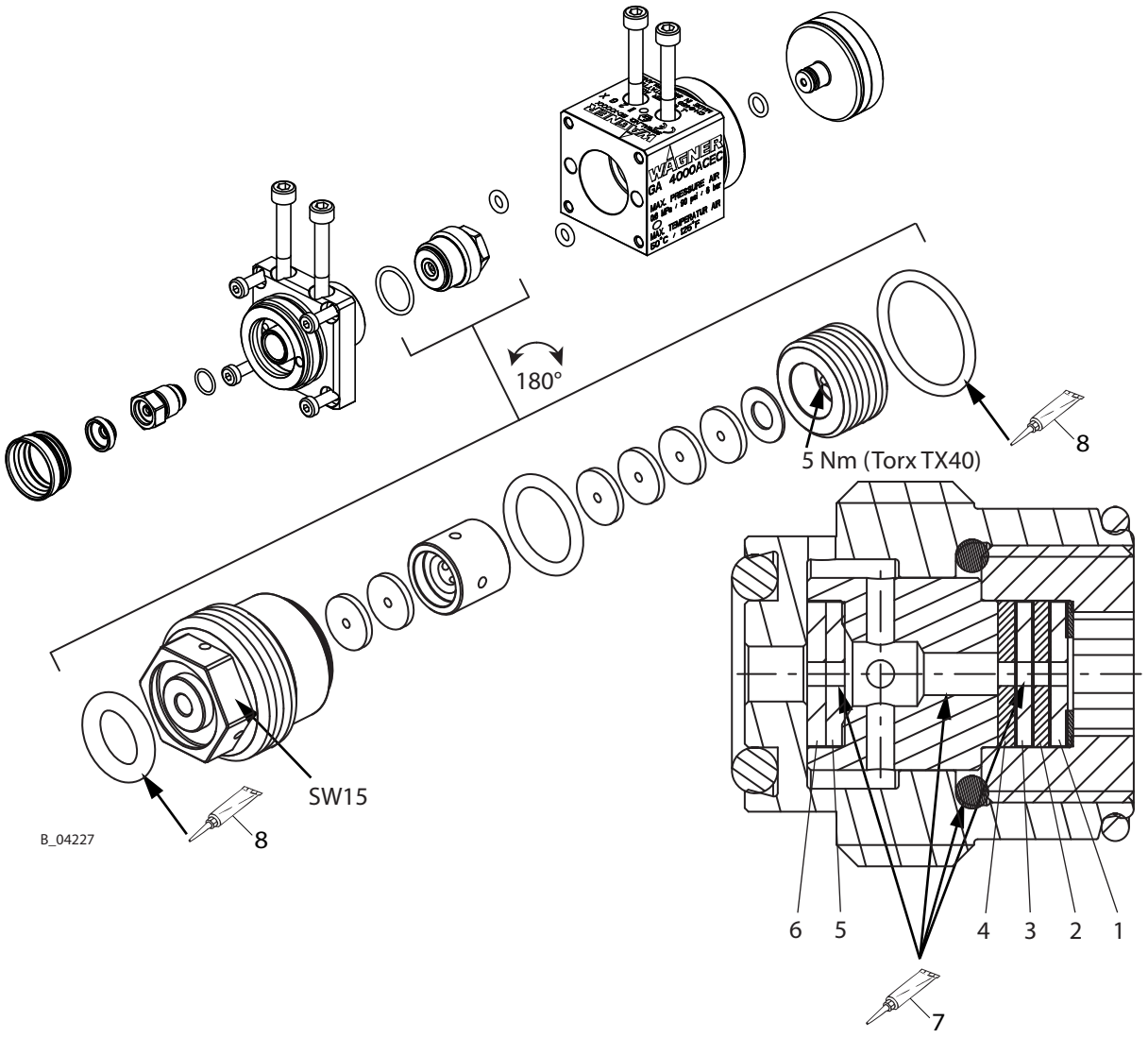

Order of seals:

1) Sealing set GA 4000 packing RP: Order No. 2339140

Pos	Product	Order no.	Order No. (set of 12 packings)
1	PTFE + GF	--	2339141
2	PE	--	2339142
3	PTFE + GF	--	2339141
4	PE	--	2339142
5	PTFE + GF	--	2339141
6	PTFE + GF	--	2339141
7	Mobilux® EP 2 grease	380924	--
8	Vaseline white	9992698	--

2) Sealing set GA 4000 packing RP special: Order No. 2339810

Pos	Product	Order no.	Order No. (set of 12 packings)
1	PTFE	--	2339143
2	PE	--	2339142
3	PTFE	--	2339143
4	PE	--	2339142
5	PTFE + GF	--	2339141
6	PTFE + GF	--	2339141
7	Mobilux® EP 2 grease	380924	--
8	Vaseline white	9992698	--

10.3.3 ASSEMBLING OF GA 4000ACEC

General note:
Lightly grease o-rings and sliding surfaces with Vaseline white PHV II.

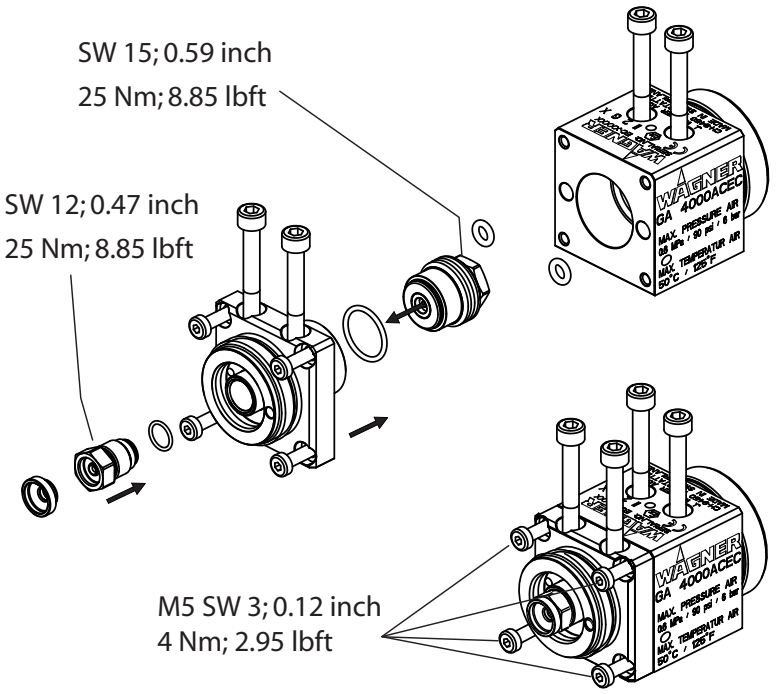

Note:
Put distributor seal (G) on air cap (H) and place seal and air cap in gun housing. Screw union nut (K) in until the distributor seal ring catches in the groove (audible click).

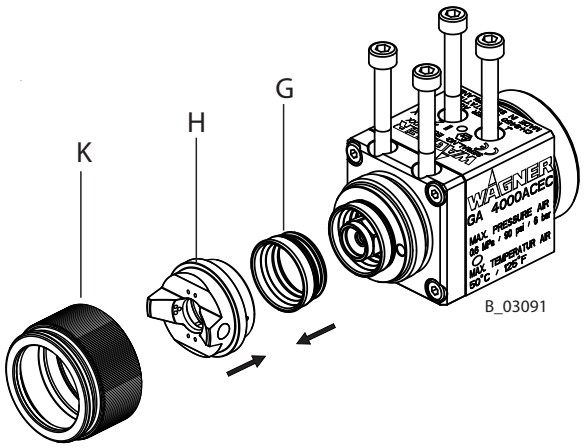

Dismount union nut and air cap again.

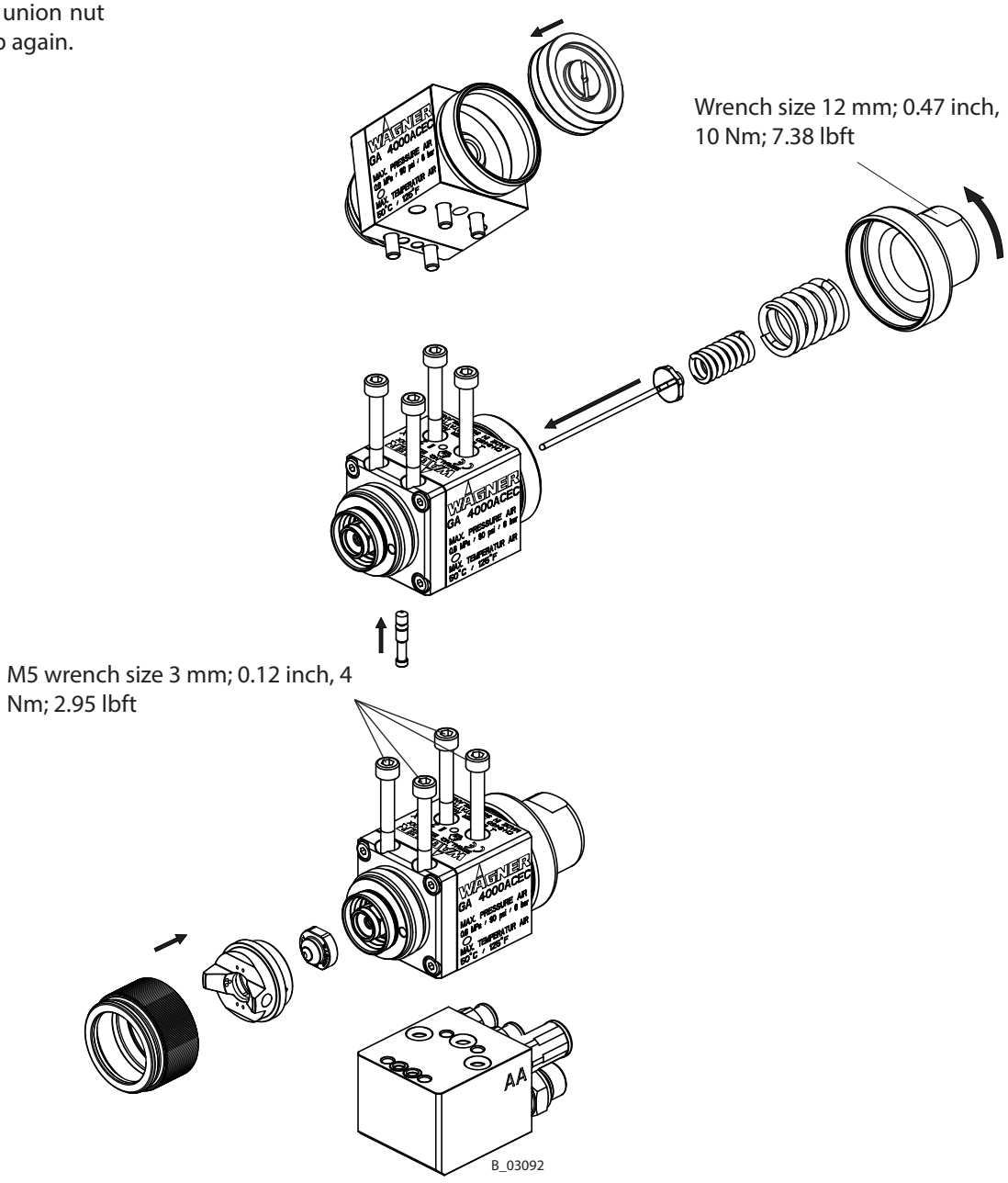

11 FUNCTION TEST AFTER REPAIR WORK

After all repair work, the spray gun must be checked for safe condition before recommissioning. The necessary scope of inspection and testing depends on the repair carried out and must be documented by the repair personnel.

12 DISPOSAL

When the equipment must be scrapped, please differentiate the disposal of the waste materials.

The following materials have been used:

- Stainless steel
- Aluminum
- Elastomers
- Plastic
- Carbide

The consumable products (lacquers, adhesives, solvents) must be disposed of in accordance with the applicable specific standards.

13 ACCESSORIES

13.1 AIRCOAT NOZZLES ACF3000

B_00021

Order no.	Marking	Drilled hole ⌀ inch; mm	Spray angle	Recommended gun filter	Recommended edge filter	Application
379107	07/10	0.007-0.18	10°	Red 200 mesh / Yellow 100 mesh	200 mesh	Natural lacquer
379207	07/20	0.007-0.18	20°			
379209	09/20	0.009-0.23	20°			Clear lacquer Oils
379309	09/30	0.009-0.23	30°			
379409	09/40	0.009-0.23	40°			
379509	09/50	0.009-0.23	50°			
379609	09/60	0.009-0.23	60°			
379111	11/10	0.011-0.28	10°			Synthetic resin lacquer PVC lacquer
379211	11/20	0.011-0.28	20°			
379311	11/30	0.011-0.28	30°			
379411	11/40	0.011-0.28	40°			
379511	11/50	0.011-0.28	50°			
379611	11/60	0.011-0.28	60°			
379113	13/10	0.013-0.33	10°		100 mesh	Lacquers Base coat Primer Filler
379213	13/20	0.013-0.33	20°			
379313	13/30	0.013-0.33	30°			
379413	13/40	0.013-0.33	40°			
379513	13/50	0.013-0.33	50°			
379613	13/60	0.013-0.33	60°			
379813	13/80	0.013-0.33	80°			
379115	15/10	0.015-0.38	10°			Filler Rust proofing paints
379215	15/20	0.015-0.38	20°			
379315	15/30	0.015-0.38	30°			
379415	15/40	0.015-0.38	40°			
379515	15/50	0.015-0.38	50°			
379615	15/60	0.015-0.38	60°			
379815	15/80	0.015-0.38	80°			
379217	17/20	0.017-0.43	20°		60 mesh	Rust proofing paints Latex paints
379317	17/30	0.017-0.43	30°			
379417	17/40	0.017-0.43	40°			
379517	17/50	0.017-0.43	50°			
379617	17/60	0.017-0.43	60°			
379817	17/80	0.017-0.43	80°			

Order no.	Marking	Drilled hole ∅ inch; mm	Spray angle	Recommended gun filter	Recommended edge filter	Application
379219	19/20	0.019-0.48	20°	White 50 mesh / Yellow 100 mesh	60 mesh	Rust proofing paints Latex paints
379319	19/30	0.019-0.48	30°			
379419	19/40	0.019-0.48	40°			
379519	19/50	0.019-0.48	50°			
379619	19/60	0.019-0.48	60°			
379819	19/80	0.019-0.48	80°			
379221	21/20	0.021-0.53	20°			Mica paints Zinc rich paints Rust proofing paints Glue paints
379421	21/40	0.021-0.53	40°			
379521	21/50	0.021-0.53	50°			
379621	21/60	0.021-0.53	60°			
379821	21/80	0.021-0.53	80°			
379423	23/40	0.023-0.58	40°			
379623	23/60	0.023-0.58	60°			
379823	23/80	0.023-0.58	80°			
379425	25/40	0.025-0.64	40°			
379625	25/60	0.025-0.64	60°			
379825	25/80	0.025-0.64	80°			
379427	27/40	0.027-0.69	40°			
379627	27/60	0.027-0.69	60°			
379827	27/80	0.027-0.69	80°			
379429	29/40	0.029-0.75	40°			
379629	29/60	0.029-0.75	60°			
379829	29/80	0.029-0.75	80°			
379431	31/40	0.031-0.79	40°			
379531	31/60	0.031-0.79	60°			
379631	31/80	0.031-0.79	80°			
379435	35/40	0.035-0.90	40°			
379635	35/60	0.035-0.90	60°			
379835	35/80	0.035-0.90	80°			

B_00021

13.2 AIRCOAT NOZZLE SETS COMPLETE ACF3000 S2 (4 PIECES)

Order no.	Marking	Drilled hole ∅ inch; mm	Spray angle
2391811	9/40 S2	0.009; 0.23	40°
2391809	11/10 S2	0.011; 0.28	10°
2368877	11/20 S2	0.011; 0.28	20°
2396188	11/30 S2	0.011; 0.28	30°
2368879	11/40 S2	0.011; 0.28	40°
2368896	11/60 S2	0.011; 0.28	60°
2368876	11/80 S2	0.011; 0.28	80°
2368880	13/40 S2	0.013; 0.33	40°
2368897	13/60 S2	0.013; 0.33	60°
2368898	13/80 S2	0.013; 0.33	80°
2368899	15/60 S2	0.015; 0.38	60°
2396189	17/80 S2	0.017; 0.43	80°

B_00021

13.3 ROUND JET NOZZLE ATTACHMENT

Order no.	Designation
394180	Round jet nozzle attachment (without nozzle insert)

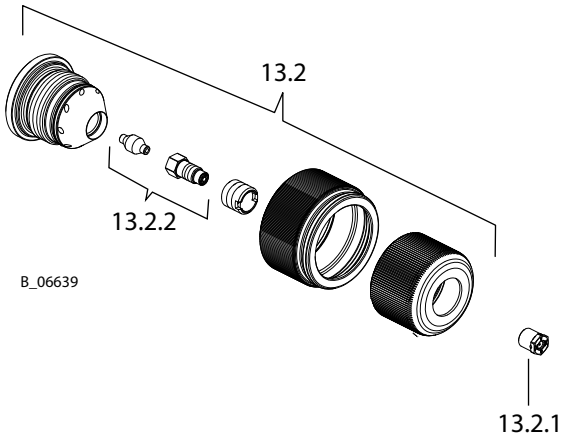

B_06639

13.3.1 RXX NOZZLE INSERTS

Order no.	Designation	Marking	Jet ∅ **
132720	Nozzle insert R11	11	approx. 250; 9.84
132721	Nozzle insert R12	12	approx. 250; 9.84
132722	Nozzle insert R13	13	approx. 250; 9.84
132723	Nozzle insert R14	14	approx. 250; 9.84
132724	Nozzle insert R15	15	approx. 250; 9.84
132725	Nozzle insert R16	16	approx. 250; 9.84
132726	Nozzle insert R17	17	approx. 250; 9.84
132727	Nozzle insert R18	18	approx. 250; 9.84
132728	Nozzle insert R19	19	approx. 250; 9.84
132729	Nozzle insert R20	20	approx. 250; 9.84
132730	Nozzle insert R21	21	approx. 250; 9.84
132731	Nozzle insert R22	22	approx. 250; 9.84

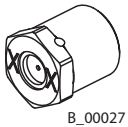
B_00027

** Jet width in mm; inches at a distance of approx. 30 cm; 11.8 inches from the object and at a pressure of 10 MPa; 100 bar; 1450 psi, synthetic resin paint, 20 DIN4 seconds.

13.3.2 NOZZLE SCREW JOINT, COMPLETE

Order no.	Designation
132922	Nozzle screw joint, complete

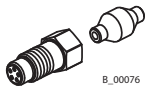
B_00076

13.4 HOSES

Order no.	Designation
9984405	High-pressure hose M16x1.5, 1 m; 3.28 ft, DN 4 mm; ID 0.16 inch, 27 MPa; 270 bar; 3916 psi
9984507	High-pressure hose M16x1.5, 15 m; 98.4 ft, DN 6 mm; ID 0.24 inch, 27 MPa; 270 bar; 3916 psi
9984510	High-pressure hose M16x1.5, 7.5 m; 24.6 ft, DN 4 mm; ID 0.16 inch, 27 MPa; 270 bar; 3916 psi
9984573	High-pressure hose NPSM1/4", 7.5 m; 24.6 ft, DN 4 mm; ID 0.16 inch, 27 MPa; 270 bar; 3916 psi
9984574	High-pressure hose NPSM1/4"; 15 m; 98.4 ft, DN 6 mm; ID 0.24 inch, 27 MPa; 270 bar; 3916 psi
9982035	Air hose, red, outer ∅ 6 mm; 0.24 inch, inner ∅ 4 mm; 0.16 inch, polyamide, per meter
9982061	Air hose, blue, outer ∅ 6 mm; 0.24 inch, inner ∅ 4 mm; 0.16 inch, polyamide, per meter
9982033	Air hose, green, outer ∅ 6 mm; 0.24 inch, inner ∅ 4 mm; 0.16 inch, polyamide, per meter
9982062	Air hose, blue, outer ∅ 8 mm; 0.32 inch, inner ∅ 5.5 mm; 0.22 inch, polyamide, per meter

13.5 MISCELLANEOUS

Order no.	Designation	
9997001	Nozzle cleaning brush	
8612001	Nozzle cleaning needle set, 12 pieces	
123446	Double fitting M16x1.5 (for extension for product hose)	
367560	Double fitting NPSM 1/4" (for extension for product hose)	
380941	Standard mounting bracket, 180 mm; ∅ 16 mm, 7.1 inches; ∅ 0.63 inch	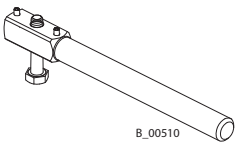 B_00510
2314079	Cefla adapter plate	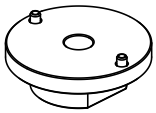 B_03099
380942	Rotary gun holder (standard)	
380945	Rotary holder, 40/40/5	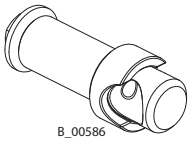 B_00586
380943	Complete swivel drive	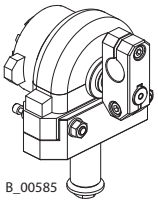 B_00585
380944	Cross clamp for swivel drive	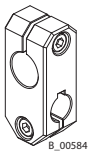 B_00584

14 SPARE PARTS

14.1 HOW CAN SPARE PARTS BE ORDERED?

Always supply the following information to ensure delivery of the right spare part:

Order number, designation and quantity

The quantity need not be the same as the number given in the quantity column "**Stk**" on the list. This number merely indicates how many of the respective parts are used in each component.
The following information is also required to ensure smooth processing of your order:

- address for the invoice,
- address for delivery,
- name of the person to be contacted in the event of any queries,
- type of delivery (normal mail, express delivery, air freight, courier, etc.).

Identification in spare parts lists.

Explanation of column "**K**" (labeling) in the following spare parts lists:

◆ Wearing part

Note: These parts are not covered by warranty terms.

● Not part of standard equipment, available, however, as additional extra.

⚠ DANGER

Incorrect maintenance/repair!

Danger to life and equipment damage.

→ Only a WAGNER service center or a suitably trained person may carry out repairs and replace parts.
→ Only repair and replace parts that are listed in the "Spare parts" chapter and that are assigned to the unit.
→ Before all work on the device and in the event of work interruptions:
  – Switch off the energy and compressed air supply.
  – Relieve the pressure from the spray gun and device.
  – Secure the spray gun against actuation.
→ Observe the operating and service manual for all work.

14.2 SPARE PARTS LIST FOR GA 4000ACEC

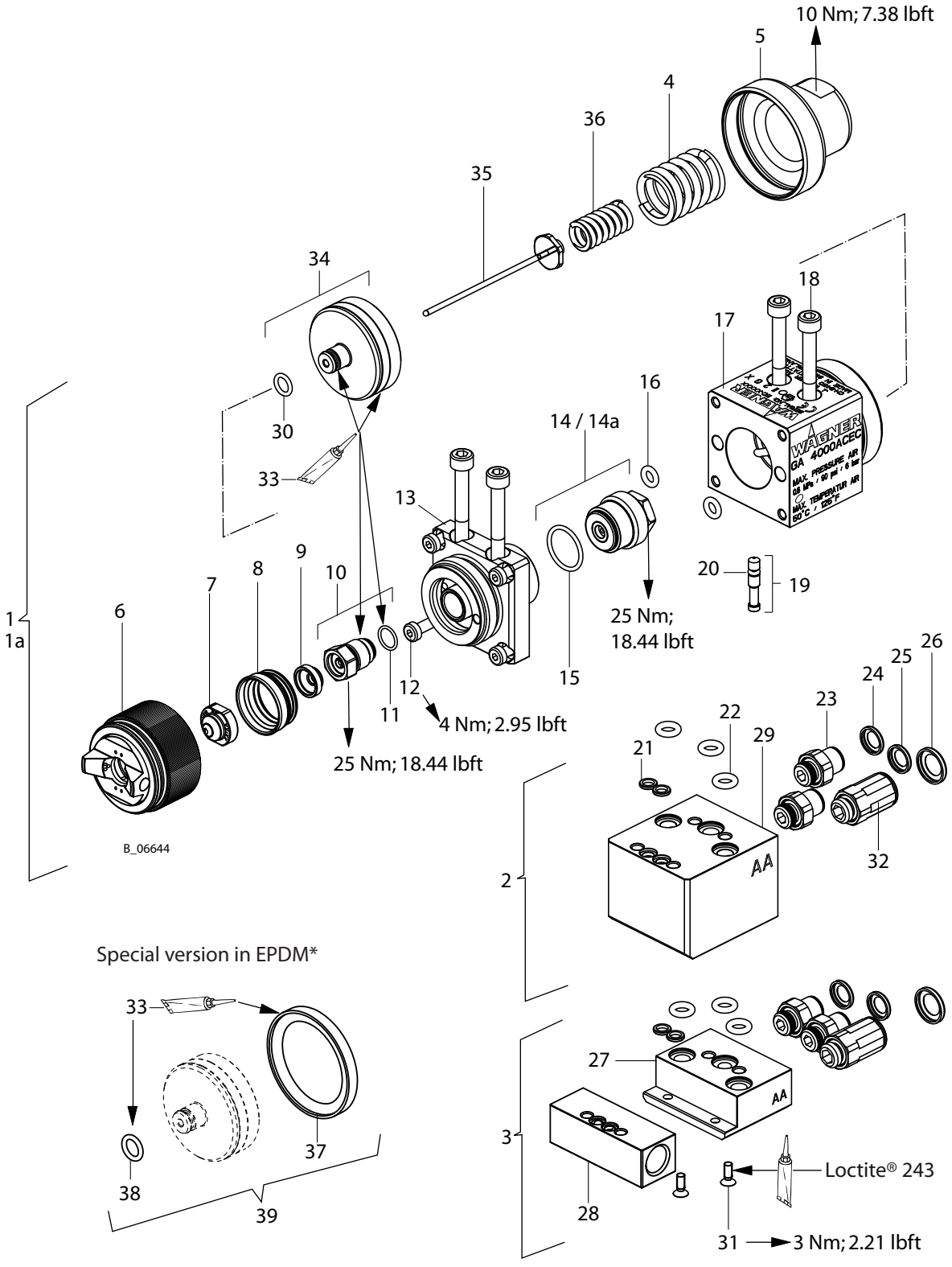

* EPDM version suitable for UV lacquers and acetone

Spare parts list				GA 4000ACEC C		GA 4000ACEC NC	
Pos	K		Designation	Qty	Order no.	Qty	Order no.
1	◆		Gun body, GA4000ACEC	1	2312145	1	2312145
1a	◆		Gun body, GA 4000ACEC (RP)	1	2338602	1	2338602
2	◆		Ground plate, GA 4000ACEC R	1	2308812	1	2308812
3	◆		Base plate GA 4000ACEC side con.	1	2363385	1	2363385
4	◆		Helical spring	1	9998991	1	9998991
5			End cap short	1	2314274	1	2314274
6	●		Air cap LV plus (red)	1	2308808	1	2308808
6	●		Air cap HV plus (blue)	1	2308809	1	2308809
6	●		Air cap LA plus (bronze)	1	2313493	1	2313493
6	●		Air cap LV plus (blank)	1	2340299	1	2340299
7	●		AC nozzle	1	379...	1	379...
8	◆		Sealing ring	1	394339	1	394339
9	◆		Sealing ring nozzle	1	364328	1	364328
10	◆		Valve housing, complete	1	2314279	1	2314279
11	◆		O-ring	1	9974245	1	9974245
12			Socket cap screw	4	2307893	4	2307893
13			Head piece	1	2314278	1	2314278
14	◆		Packing insert GA 4000AC (standard version, can only be replaced completely)	1	2313516	1	2313516
14a	◆		Packing insert GA 4000AC (RP)	1	2338601	1	2338601
15	◆		O-ring	1	367528	1	367528
16	◆		O-ring	2	9974153	2	9974153
17			Piston housing EC	1	2314303	1	2314303
18			Socket cap screw	4	2308292	4	2308292
19	●		Complete product channel lock pin	-	--	1	2310534
20	◆		O-ring	-	--	1	2307873
21	◆		Sealing product	2	2310473	2	2310473
22	◆		O-ring	3	9974265	3	9974265
23			Straight screw-in fitting	2	9998090	2	9998090
24			Coding ring green	1	9998994	1	9998994
25			Coding ring red	1	9998995	1	9998995
26			Coding ring blue	1	9998618	1	9998618
27			Adapter plate	1	2316365	1	2316365
28			Product adapter plate	1	2316366	1	2316366
29			Base plate	1	2314246	1	2314246
30	◆		O-ring	1	248314	1	248314
31			Hexagon socket countersunk head screw	2	2310556	2	2310556
32			Straight screw-in fitting	1	9998993	1	9998993
33	●		Vaseline white PHHV	1	9992698		
34	◆		Complete piston EC	1	2314302	1	2314302
35	◆		Complete valve rod EC	1	2346099	1	2346099
36	◆		Helical spring	1	2309945	1	2309945

◆ = Wearing parts

-> For service sets, see Chapter 14.4.

● = Not part of the standard equipment but available as a special accessory

Spare parts list				GA 4000ACEC C		GA 4000ACEC NC	
Pos	K		Designation	Qty	Order no.	Qty	Order no.
37	◆ ●		Piston seal EPDM	1	2322531	1	2322531
38	◆ ●		O-ring	1	9974179	1	9974179
39	◆ ●		Sealing set GA 4000ACEC (EPDM)	1	2322533	1	2322533

◆ = Wearing parts

-> For service sets, see Chapter 14.4.

● = Not part of the standard equipment but available as a special accessory

14.3 SPARE PARTS LIST FOR GA 4000ACEC ROBOT

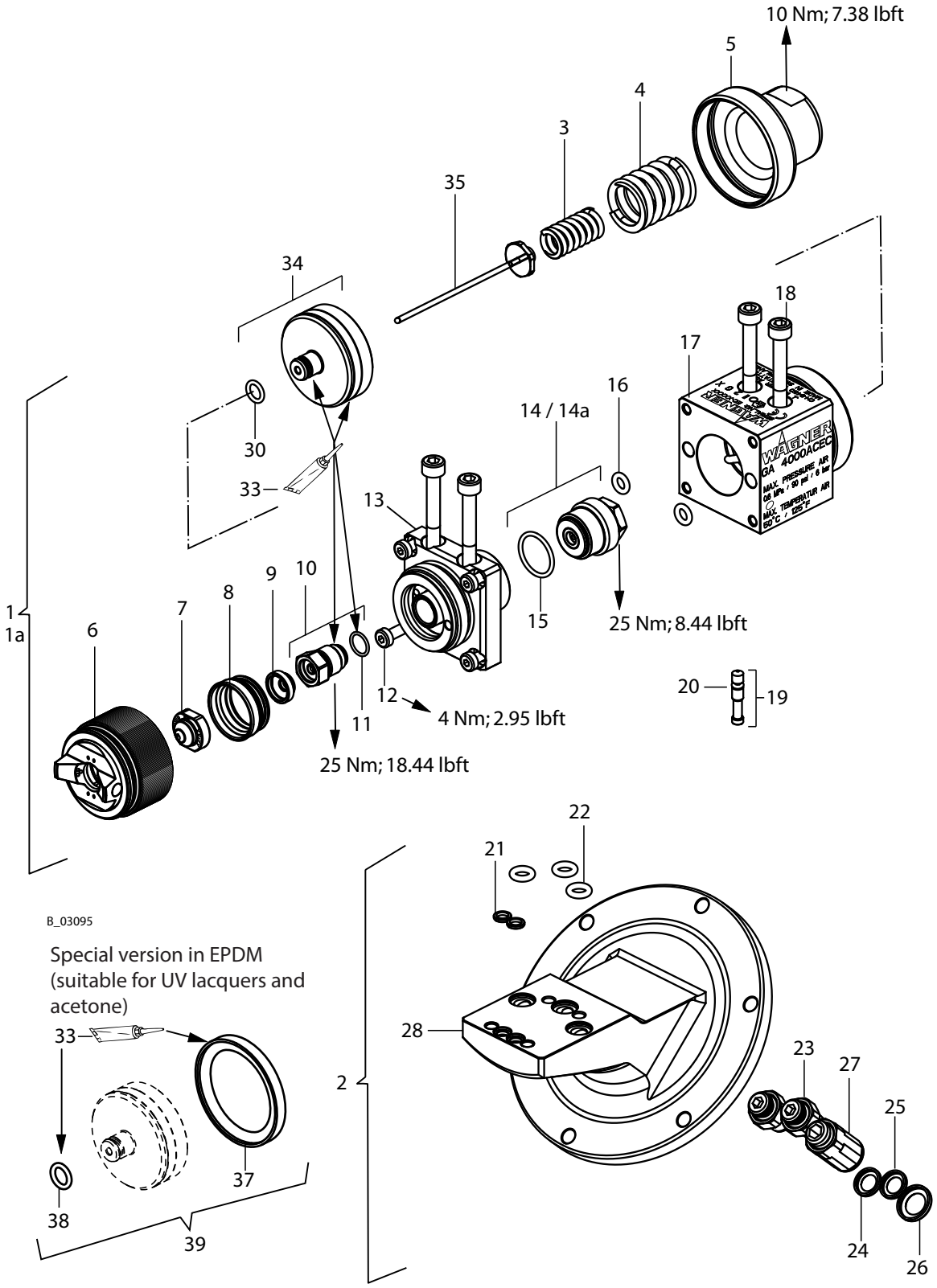

Spare parts list				Robot EC C		Robot EC NC	
Pos	K		Designation	Qty	Order no.	Qty	Order no.
1	◆		Gun body, GA4000ACEC	1	2312145	1	2312145
1a	◆		Gun body, GA 4000ACEC (RP)	1	2338602	1	2338602
2	◆		Base plate GA 4000ACEC-Fanuc Robot	1	2313677	1	2313677
3	◆		Helical spring	1	2309945	1	2309945
4	◆		Helical spring	1	9998991	1	9998991
5			End cap short	1	2314274	1	2314274
6	●		Air cap LV plus (red)	1	2308808	1	2308808
6	●		Air cap HV plus (blue)	1	2308809	1	2308809
6	●		Air cap LA plus (bronze)	1	2313493	1	2313493
6	●		Air cap LV plus (blank)	1	2340299	1	2340299
7	●		AC nozzle	1	379...	1	379...
8	◆		Sealing ring	1	394339	1	394339
9	◆		Sealing ring nozzle	1	364328	1	364328
10	◆		Valve housing, complete	1	2314279	1	2314279
11	◆		O-ring	1	9974245	1	9974245
12			Socket cap screw	4	2307893	4	2307893
13			Head piece	1	2314278	1	2314278
14	◆		Packing insert GA 4000AC (standard version, can only be replaced completely)	1	2313516	1	2313516
14a	◆		Packing insert GA 4000AC (RP)	1	2338601	1	2338601
15	◆		O-ring	1	367528	1	367528
16	◆		O-ring	2	9974153	2	9974153
17			Piston housing EC	1	2314303	1	2314303
18			Socket cap screw	4	2308292	4	2308292
19	◆	●	Complete product channel lock pin	-	-	1	2310534
20	◆		O-ring	-	-	1	2307873
21	◆		Sealing product	2	2310473	2	2310473
22	◆		O-ring	3	9974265	3	9974265
23			Straight screw-in fitting	2	9998090	2	9998090
24			Coding ring green	1	9998994	1	9998994
25			Coding ring red	1	9998995	1	9998995
26			Coding ring blue	1	9998618	1	9998618
27			Straight screw-in fitting	1	9998993	1	9998993
28			Base plate	1		1	
30	◆		O-ring	1	248314	1	248314
33	●		Vaseline white PHHV	1	9992698		
34	◆		Complete piston EC	1	2314302	1	2314302
35	◆		Complete valve rod EC	1	2346099	1	2346099
37	◆	●	Piston seal EPDM	1	2322531	1	2322531
38	◆	●	O-ring	1	9974179	1	9974179
39	◆	●	Sealing set GA 4000ACEC (EPDM)	1	2322533	1	2322533

◆ = Wearing parts

-> For service sets, see Chapter 14.4.

● = Not part of the standard equipment but available as a special accessory

14.4 SERVICE SETS AND SPARE PARTS GROUPS

Order no.	Designation	Consisting of spare parts items
2314356	Base plate service set	21, 22
2314354	GA 4000ACEC gun body service set	8, 9, 11, 14, 16, 30
2338658	GA 4000ACEC (RP) gun body service set	8, 9, 11, 16, 30
2322533	Sealing set GA 4000ACEC (EPDM)	37, 38

14.5 PACKING INSERT GA 4000AC (RP)

Spare parts list					set of 12 packings
Pos	K	Designation	Stk	Order no.	Order no.
1		Packing insert GA 4000AC (RP)	1	2338601	-
2		Housing	1	--	-
3	◆	PE sealing washer	2	--	2339142
4		Housing insert	1	--	--
5		Housing screw	1	--	--
6	◆	Pressure disk	1	2338567	--
7	◆	O-ring	1	9974196	--
8	◆	O-ring	1	367528	--
9	◆	O-ring	1	2338570	--
10		Mobilux® EP 2 grease	1	9998808	--
11		Vaseline white, PHHV II	1	9992698	--
12	◆	PTFE + GF sealing washer	4	--	2339141
13	◆●	PTFE sealing washer	2	--	2339143
14		Assembly manual for GA4000AC packing (RP)	1	2338708	--

◆ = Wearing parts

-> For sealing sets, see Chapter 14.6.

● = Not part of the standard equipment but available as a special accessory.

Packing insert

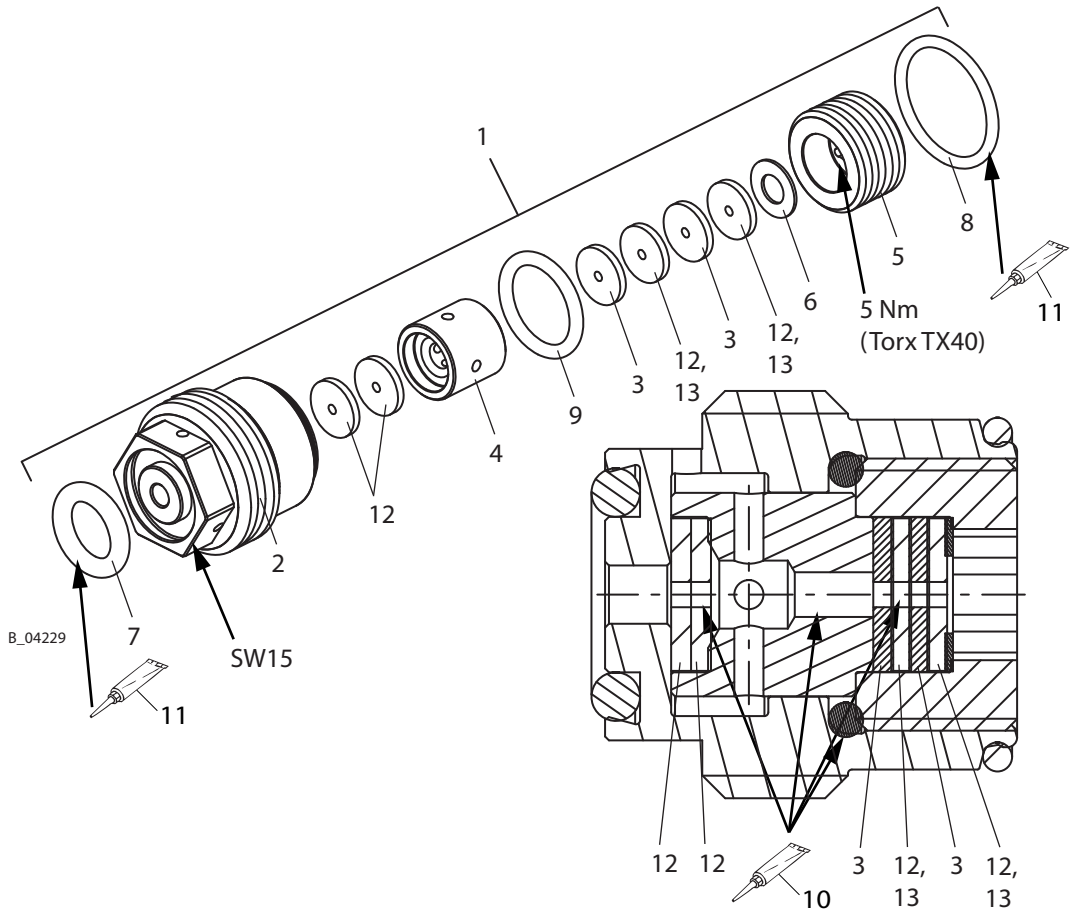

14.6 SEALING SET GA 4000 PACKING RP AND RP SPECIAL

Order no.	Designation	Consisting of spare parts items
2339140	Sealing set GA 4000 packing RP	3, 6, 7, 8, 9, 12, 14
2339810	Sealing set GA 4000 packing RP special	3, 6, 7, 8, 9, 12, 13, 14

15 DECLARATION OF CONFORMITY

15.1 EU DECLARATION OF CONFORMITY

Herewith we declare that the supplied version of:

GA 4000ACIC

complies with the following guidelines:

2006/42/EC
2014/34/EU

Applied standards, in particular:

EN ISO 12100: 2010	EN ISO 80079-36: 2016
EN 1953:2013	EN ISO/IEC 80079-34: 2011
EN ISO 13732-1: 2008	
EN 14462:2015	
EN 1127-1:2011	

Applied national technical standards and specifications, in particular:

DGUV regulation 100-500 Chapter 2.29	
DGUV regulation 100-500 Chapter 2.36	
TRGS 727	

Identification: CE Ex II 2G X

EU Declaration of Conformity
The EU Declaration of Conformity is enclosed with this product. If needed, further copies can be ordered through your WAGNER dealer by specifying the product name and serial number.

Order number: 2315627

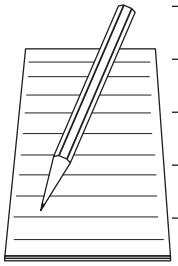

Order no. 2311057
Edition 05/2018

Germany
J. Wagner GmbH
Otto-Lilienthal-Str. 18
Postfach 1120
88677 **Markdorf**
Phone +49/ (0)7544 / 5050
Telefax +49/ (0)7544 / 505200
E-Mail ts-liquid@wagner-group.com

Switzerland
Wagner International AG
Industriestrasse 22
9450 **Altstätten**
Phone +41/ (0)71 / 757 2211
Telefax +41/ (0)71 / 757 2222

More contact addresses:
www.wagner-group.com

Subject to changes without notice

Document No. 11093262
Version G