WAGNER

Translation of the Original Operating Manual

TOPFINISH DD10

Version 09/2016

Pneumatic Double Diaphragm Pump

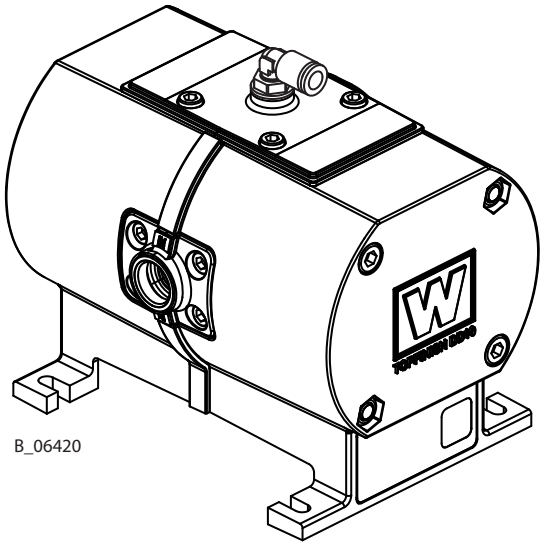

B_06420

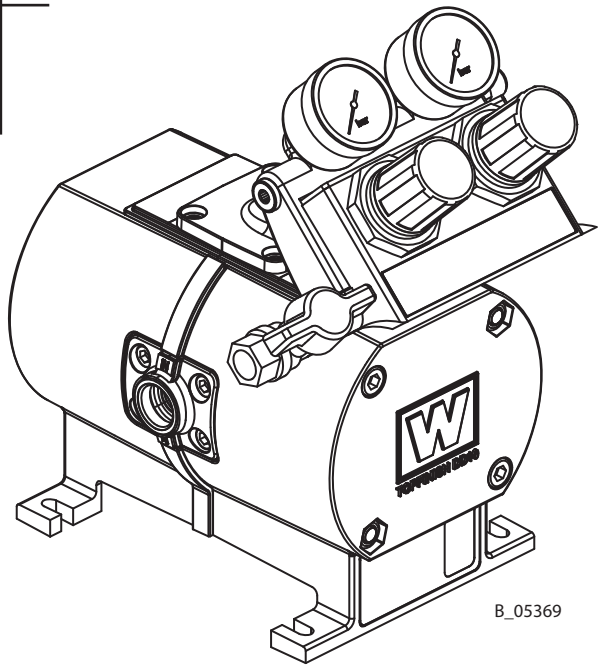

B_05369

CE Ex II 2G c IIB T4

Table of Contents

1	**ABOUT THESE INSTRUCTIONS**	**4**
1.1	Preface	4
1.2	Warnings, Notices and Symbols in these Instructions	5
1.3	Languages	5
1.4	Abbreviations in the Text	5
1.5	Terminology for the Purpose of this Manual	6
2	**CORRECT USE**	**6**
2.1	Device Types	6
2.2	Type of Use	6
2.3	Use in an Explosion Hazard Area	6
2.4	Safety Parameters	7
2.5	Processible Working Materials	7
2.6	Reasonably Foreseeable Misuse	8
2.7	Residual Risks	8
3	**IDENTIFICATION**	**9**
3.1	Explosion Protection Identification	9
3.2	Type Plate	10
4	**GENERAL SAFETY INSTRUCTIONS**	**11**
4.1	Safety Instructions for the Operator	11
4.2	Safety Instructions for Staff	12
5	**DESCRIPTION**	**15**
5.1	Components	15
5.2	Mode of Operation	15
5.3	Scope of Delivery	16
5.4	Data	16
5.5	Pressure Regulator Unit for the TOPFINISH DD10	20
5.6	Return Flow Valve	21
6	**ASSEMBLING AND COMMISSIONING**	**22**
6.1	Training Assembly/Commissioning Staff	22
6.2	Storage Conditions	22
6.3	Installation Conditions	22
6.4	Transportation	22
6.5	Assembly and Installation	23
6.6	Grounding	25
6.7	Safety Checks	26
6.8	Commissioning	27
7	**OPERATION**	**30**
7.1	Training the Operating Staff	30
7.2	Safety Instructions	30
7.3	Working	31
7.4	Pressure Relief/Work Interruption	31

Table of Contents

8	**CLEANING AND MAINTENANCE**	**32**
8.1	Cleaning	32
8.2	Maintenance	34
8.3	Diaphragm Replacement	36
8.4	Replacing the Inlet and Outlet Valves	37
9	**TROUBLESHOOTING, MAINTENANCE AND REPAIR**	**38**
9.1	Troubleshooting and Rectification	38
10	**REPAIR WORK**	**39**
10.1	Repair Staff	39
10.2	Safety Instructions	39
10.3	Cleaning the Parts after Disassembly	40
11	**FUNCTION TEST AFTER THE REPAIR**	**41**
12	**DISPOSAL**	**42**
13	**ACCESSORIES**	**42**
14	**SPARE PARTS**	**43**
14.1	How Can Spare Parts Be Ordered?	43
14.2	Overview	44
14.3	Spare Part Sets	46
15	**GUARANTEE AND CONFORMITY DECLARATIONS**	**49**
15.1	Important Notes Regarding Product Liability	49
15.2	Warranty Claim	49
15.3	CE Declaration of Conformity	50

1 ABOUT THESE INSTRUCTIONS

1.1 PREFACE

The operating manual contains information about safely operating, maintaining, cleaning and repairing the device.
The operating manual is part of the device and must be available to the operating and service personnel.
The device may only be operated by trained personnel and in compliance with this operating manual. Operating and service personnel should be instructed according to the safety instructions.
This equipment can be dangerous if it is not operated according to the instructions in this operating manual.

1.2 WARNINGS, NOTICES AND SYMBOLS IN THESE INSTRUCTIONS

Warning instructions in this operating manual highlight particular dangers to users and to the device and state measures for avoiding the hazard. These warning instructions fall into the following categories:

Danger - immediate risk of danger.
Non-observance will result in death or serious injury.

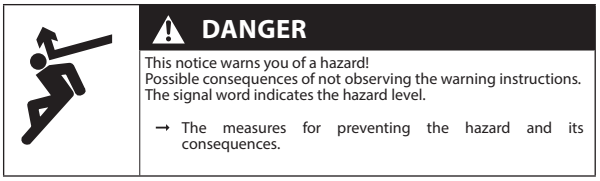

Warning - possible imminent danger.
Non-observance may result in death or serious injury.

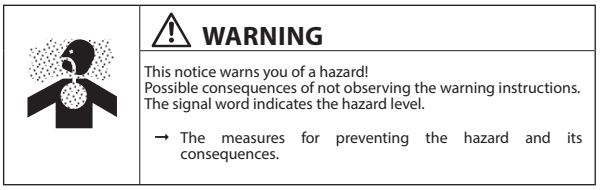

Caution - a possibly hazardous situation.
Non-observance may result in minor injury.

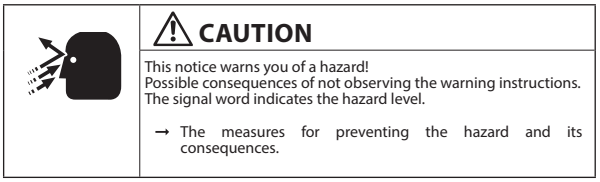

Notice - a possibly hazardous situation.
Non-observance may result in damage to property.

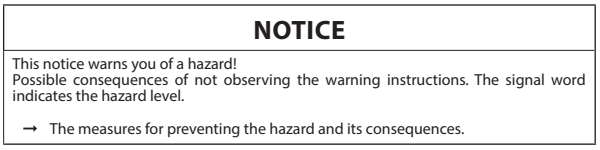

Note - provides information about particular characteristics and how to proceed.

1.3 LANGUAGES

The operating manual is available in the following languages:

Language	Order No.	Language	Order No.
German	2366669	English	2366672
French	2369230	Italian	2369231
Spanish	2369232	Russian	2369233
Chinese	2369234		

Additional languages on request or at: **www.wagner-group.com**

1.4 ABBREVIATIONS IN THE TEXT

Stk	Number of pieces
Pos	Position
K	Marking in the spare parts lists
Order No.	Order number
DH	Double stroke

1.5 TERMINOLOGY FOR THE PURPOSE OF THIS MANUAL

Cleaning	Manual cleaning of devices and device parts with cleaning agent
Flushing	Internal flushing of paint-wetted parts with flushing agent
Product pressure generator	Pump or pressure tank
Staff qualifications	
Trained person	Is instructed in the tasks assigned to him/her, the potential risks associated with improper behavior as well as the necessary protective devices and measures.
Electrically trained person	Is instructed by an electrician about the tasks assigned to him/her, the potential risks associated with improper behavior as well as the necessary protective devices and measures.
Electrician	Can assess the work assigned to him/her and detect possible hazards based on his/her technical training, knowledge and experience in relevant provisions.
Skilled person In accordance with TRBS 1203 (2010)	A person, who, based on his/her technical training, experience and recent vocational experience, has sufficient technical knowledge in the areas of explosion protection, protection from pressure hazards and electric hazards (if applicable) and is familiar with the relevant and generally accepted rules of technology so that he/she can inspect and assess the status of devices and coating systems based on workplace safety.

2 CORRECT USE

2.1 DEVICE TYPES

Pneumatic double diaphragm pump and spray pack

TOPFINISH DD 10

2.2 TYPE OF USE

The device is suitable for processing liquid materials like paints and lacquers in accordance with the classification into explosion classes IIA or IIB.

2.3 USE IN AN EXPLOSION HAZARD AREA

The pneumatic double diaphragm pumps can be employed in potentially explosive areas (zone 1).

2.4 SAFETY PARAMETERS

WAGNER accepts no liability for any damage arising from incorrect use.

- → Use the device only to work with the products recommended by WAGNER.
- → Only operate the device as a whole.
- → Do not deactivate safety fixtures.
- → Use only WAGNER original spare parts and accessories.

The double diaphragm pump may only be operated under the following conditions:

- → The operating personnel must be trained on the basis of this operating manual.
- → The safety regulations listed in this operating manual must be observed.
- → The operating, maintenance and repair information in this operating manual must be observed.
- → The statutory requirements and accident prevention regulation standards in the country of use must be observed.

2.5 PROCESSIBLE WORKING MATERIALS

→ Fluid materials like paints and varnishes.

Application	TOPFINISH DD10
Water-dilutable products	↗
Solvent-based lacquers and paints	↗
Two-component coating products	↗
Emulsions	↗
UV lacquers	↗
Primers	↗
Epoxy and polyurethane lacquers, phenolic lacquers	↗
Liquid plastics	➙
Wax-based underside protection	↗
Shear-sensitive lacquers	↗

Legend

↗ recommended ➙ limited suitability ↘ less suitable

NOTICE

Abrasive working materials and pigments!
Greater wear of parts carrying the product.

- → Use the application-oriented model (flow rate/cycle, product, valves, etc.) as indicated in Chapter 5.4.2.
- → Check if the fluids and solvents used are compatible with the pump construction materials as indicated in Chapter 5.4.1.

2.5.1 RECOMMENDED APPLICATION AREAS

Application	TOPFINISH DD10
Furniture industry	↗
Kitchen manufacturers	↗
Joinery	↗
Window factories	→
Steel-processing industry	→
Construction of vehicles	↗
Shipbuilding	↘

Legend
↗ recommended ➟ limited suitability ↘ less suitable

2.6 REASONABLY FORESEEABLE MISUSE

The following is prohibited:
- → coating work pieces which are not grounded,
- → unauthorized conversions and modifications to the double diaphragm pump,
- → processing dry or similar coating materials, and
- → using defective components, spare parts, or accessories other than those described in Chapter 13 of this operating manual.

The forms of misuse listed below may result in physical injury or property damage:
- → use of powder as coating product and
- → incorrectly set values for processing.

WAGNER double diaphragm pumps are not designed for pumping food.

2.7 RESIDUAL RISKS

Residual risks are risks which cannot be ruled out even in the event of correct use.
If necessary, warning and prohibition signs at the relevant points of risk indicate residual risks.

Residual risk	Source	Consequences	Specific measures	Lifecycle phase
Skin contact with lacquers and cleaning agents	Handling of lacquers and cleaning agents	Skin irritations, allergies	wear protective clothing, observe safety data sheets	Operation, maintenance, disassembly
Lacquer in air outside the defined working area	Lacquering outside the defined working area	Inhalation of substances which are hazardous to health	Observe working and operating manuals	Operation, maintenance

3 IDENTIFICATION

3.1 EXPLOSION PROTECTION IDENTIFICATION

As defined in the Directive 2014/34/EU (ATEX), the device is suitable for use in potentially explosive areas.

CE Ex II 2G c IIB T4

CE:	CE mark (European Communities)
Ex:	Symbol for explosion protection
II:	Device class II
2:	Category 2 (Zone 1)
G:	Ex-atmosphere gas
C	Constructional security
IIB:	Explosion group
T4:	Temperature class: maximum surface temperature < 135 °C; 275 °F

Maximum surface temperature

→ The maximum surface temperature of the pump depends on the operating conditions (heated product) and not on the device (frictional heat).

Ignition temperature of the coating product

→ Ensure that the ignition temperature of the coating product is above the maximum surface temperature.

Ambient temperature

→ The permissible ambient temperature is: +10 °C to +60 °C; +50 °F to 140 °F.

Medium supporting atomizing

→ To atomize the product, use only weakly oxidizing gases, e.g., air.

Safe handling of WAGNER spray devices

Mechanical sparks can form if the device comes into contact with metal.
In an explosive atmosphere:

→ Do not knock or push the device against steel or rusty iron.
→ Do not drop the device.
→ Use only tools that are made of a permitted material.

Surface spraying, electrostatics

→ Do not spray device parts using electrostatic equipment.

Cleaning

If there are deposits on the surfaces, the device may form electrostatic charges. Flames or sparks can form during discharge.

→ Remove deposits from the surfaces to maintain conductivity.

→ Use only a damp cloth to clean the device.

Operation without Fluid

Avoid running the pump so that it sucks in air (without fluid inside). The air, combined with the vapor of flammable fluids, can generate internal areas with an explosion hazard. Periodically check that the pump is working, paying special attention to the presence of air in the pumped fluid, which may be caused by damaged diaphragms.

→ Avoid operating the pump with damaged diaphragms.

3.2 TYPE PLATE

Example

B_05368

1 Max. air pressure
2 Max. product pressure
3 Permissible ambient temperature
4 Article number
5 Year of manufacture
6 Read the operating manual before use

4 GENERAL SAFETY INSTRUCTIONS

4.1 SAFETY INSTRUCTIONS FOR THE OPERATOR

→ Keep this operating manual at hand near the device at all times.
→ Always follow local regulations concerning occupational safety and accident prevention.

4.1.1 ELECTRICAL EQUIPMENT

Electrical devices and equipment
→ To be provided in accordance with the local safety requirements with regard to the operating mode and ambient influences.
→ May only be maintained by skilled electricians or under their supervision.
→ Must be operated in accordance with the safety regulations and electrotechnical regulations.
→ Must be repaired immediately in the event of problems.
→ Must be decommissioned if they pose a hazard.
→ Must be de-energized before work is commenced on active parts. Inform staff about planned work. Observe electrical safety regulations.

4.1.2 PERSONNEL QUALIFICATIONS

→ Ensure that the device is only operated, maintained and repaired by trained persons.

4.1.3 SAFE WORK ENVIRONMENT

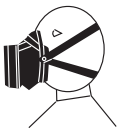

→ Ensure that the floor in the working area is static dissipative in accordance with EN 61340-4-1 (resistance must not exceed 100 megohms).
→ Ensure that all persons within the working area wear static dissipative shoes. Footwear must comply with EN 20344. The measured insulation resistance must not exceed 100 megohms.
→ Ensure that during spraying, persons wear static dissipative gloves. Grounding takes place via the spray gun handle.
→ If protective clothing is worn, including gloves, it has to comply with EN 1149-5. The measured insulation resistance must not exceed 100 megohms.
→ Paint mist extraction systems/ventilation systems must be fitted on site according to local regulations.
→ Ensure that the following components of a safe working environment are available:
– Product/air hoses adapted to the working pressure.
– Personal safety equipment (breathing and skin protection).
→ Ensure that there are no ignition sources such as naked flames, sparks, glowing wires, or hot surfaces in the vicinity. No smoking.

4.2 SAFETY INSTRUCTIONS FOR STAFF

→ Always follow the information in these instructions, particularly the general safety instructions and the warning instructions.
→ Always follow local regulations concerning occupational safety and accident prevention.

4.2.1 SAFE HANDLING OF WAGNER SPRAY DEVICES

The spray jet is under pressure and can cause dangerous injuries.
Avoid injection of paint or flushing agents:

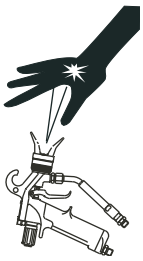

→ Never point the spray gun at people.
→ Never reach into the spray jet.
→ Before all work on the device, in the event of work interruptions and functional faults:
- Switch off the energy/compressed air supply.
- Relieve the pressure from the spray gun and device.
- Secure the spray gun against actuation.
- In the event of functional faults, remedy the fault as described in the "Troubleshooting" chapter.
→ If needed, the liquid ejection devices must be checked by experts (e.g., WAGNER service technician) at least every 12 months to ensure they are safe for work in accordance with the DGUV regulation 100-500.
- For shut down devices, the examination can be suspended until the next start-up.
→ Carry out the work steps as described in the "Pressure Relief" chapter:
- If pressure relief is required.
- If the spraying work is interrupted or stopped.
- Before the device is cleaned on the outside, checked or serviced.
- Before the spray nozzle is installed or cleaned.

In the event of skin injuries caused by paint or flushing agents:
→ Note the paint or flushing agent that you have been using.
→ Consult a doctor immediately.
Avoid risk of injury from recoil forces:
→ Ensure that you have firm footing when operating the spray gun.
→ Only hold the spray gun briefly in a position.

4.2.2 GROUNDING THE DEVICE

In order to avoid electrostatic charging of the device, the device must be grounded.
Friction, flowing liquids and air or electrostatic coating processes create charges. Flames or sparks can form during discharge.
→ Ensure that the device is grounded for every spraying operation.
→ Ground the work pieces to be coated.
→ Ensure that all persons inside the working area are grounded, e.g., that they are wearing static dissipative shoes.
→ Wear static dissipative gloves when spraying. The grounding takes place via the spray gun handle.

4.2.3 PRODUCT HOSES

- → Ensure that the hose material is chemically resistant to the sprayed products and the used flushing agents.
- → Ensure that the product hose is suitable for the pressure generated.
- → Ensure that the following information can be seen on the high-pressure hose:
  - Manufacturer
  - Permissible operating pressure
  - Date of manufacture
- → Make sure that the hoses are laid only in suitable places. Hoses should not be laid in the following places under any circumstances:
  - in high-traffic areas,
  - on sharp edges,
  - on moving parts or
  - on hot surfaces.
- → Ensure that the hoses are never run over by vehicles (e.g., fork lifts), or that the hoses are never put under pressure from the outside in any other way.
- → Ensure that the hoses are never kinked. Observe maximum bending radii.
- → Make sure that the hoses are never used to pull or move the equipment.
- → The electrical resistance of the product hose, measured at both valves, must be less than 1 megohm.
- → Suction hoses may not be subjected to pressure.

Several liquids have a high expansion coefficient. In some cases their volume can rise with consequent damage to pipes, fittings, etc. and cause fluid leakage.
When the pump sucks liquid from a closed tank, ensure that air or a suitable gas can enter the tank. Thus a negative pressure is avoided. The vacuum could implode the tank (squeeze) and can cause it to break. The tank would leak and the liquid would flow out.
The pressure created by the pump is a multiplication of the inlet air pressure.

4.2.4 CLEANING AND RINSING

- → Relieve the pressure from the device.
- → De-energize the device electrically.
- → Preference should be given to non-flammable cleaning and flushing agents.
- → Observe the specifications of the lacquer manufacturer.
- → Ensure that the flash point of the cleaning agent is at least 15 K above the ambient temperature or that cleaning is undertaken at a cleaning station with technical ventilation.
- → Take measures for workplace safety (see Chapter 4.1.3).
- → When commissioning or emptying the device, please note that an explosive mixture may temporarily exist inside the lines and components of equipment:
  - depending on the coating product used,
  - depending on the flushing agent (solvent) used,

  explosive mixture inside the lines and items of equipment.

→ Only electrically conductive tanks may be used for cleaning and flushing agents.
→ The tanks must be grounded.

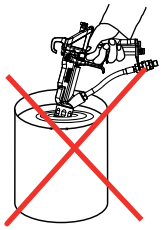

An explosive gas/air mixture forms in closed tanks.
→ Never spray into a closed tank when using solvents for flushing.

External cleaning
When cleaning the exterior of the device or its parts, also observe the following:
→ Disconnect the pneumatic supply line.
→ Use only moistened cloths and brushes. Never use abrasive agents or hard objects and never spray cleaning agents with a gun. Cleaning the device must not damage it in any way.
→ Ensure that no electrical component is cleaned with nor even immersed into solvent.

4.2.5 HANDLING HAZARDOUS LIQUIDS, VARNISHES AND PAINTS

→ When preparing or working with lacquer and when cleaning the device, follow the working instructions of the manufacturer of the lacquers, solvents and cleaning agents being used.
→ Take the specified protective measures; in particular, make sure that you wear safety goggles, protective clothing, and gloves, as well as skin protection cream if necessary.
→ Use a mask or a breathing apparatus if necessary.
→ For sufficient health and environmental safety: Operate the device in a spray booth or on a spraying wall with the ventilation (extraction) switched on.
→ Wear suitable protective clothing when working with hot products.

4.2.6 TOUCHING HOT SURFACES

→ Only touch hot surfaces if you are wearing protective gloves.
→ When operating the device with a coating product with a temperature of > 43 °C; 109.4 °F:
- Identify the device with a warning label "Warning - hot surface".

Order No.	
9998910	Instruction label
9998911	Protection label

Note: Order the two stickers together.

5 DESCRIPTION

5.1 COMPONENTS

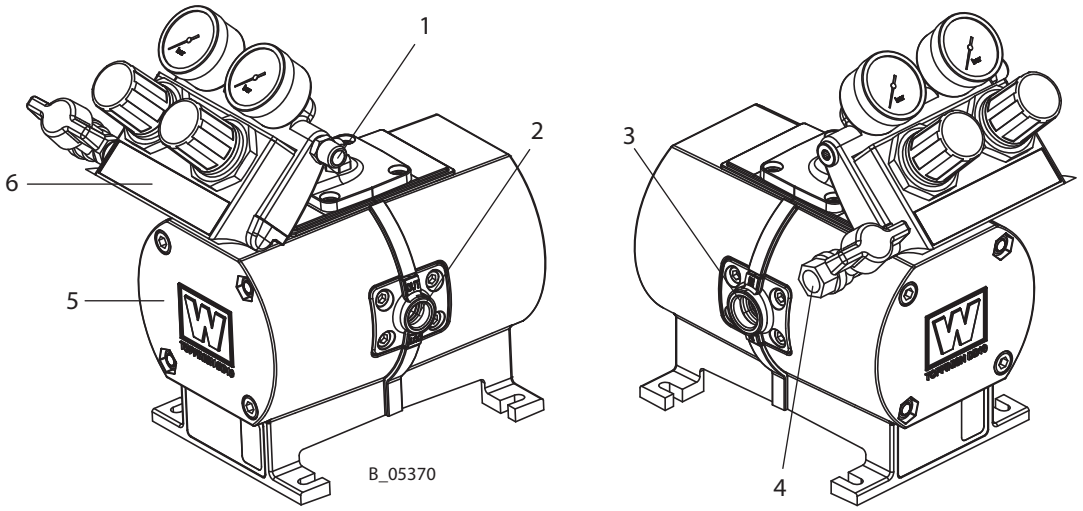

1 Air outlet for gun air
2 Product outlet
3 Product inlet
4 Air inlet
5 Pump housing
6 Pressure regulator unit

5.2 MODE OF OPERATION

The double diaphragm pump is driven with compressed air.
A pneumatic manifold alternates in supplying two diaphragms with compressed air. Diaphragm motion is created in this manner. The product is thus sucked in and displaced again. A series of four non-return valves prevents the liquid from flowing back, thus producing the suction and delivery phases in each pumping chamber, and generating the pumping effect.

5.2.1 POSITIONING

The pump can be mounted horizontally (± 10°) as well as vertically (± 10°) in any position.
Ensure that all fastening screws are correctly tightened.
Tighten the fixing screws regularly depending on pump use. In the case of continuous or prolonged operation, it is advisable to check at least once a week that there are no air and/or liquid leaks. The entire pressure regulator unit (1) can be rotated in increments of 90 degrees to align the control elements. For this purpose, the four screws (2) must be removed.

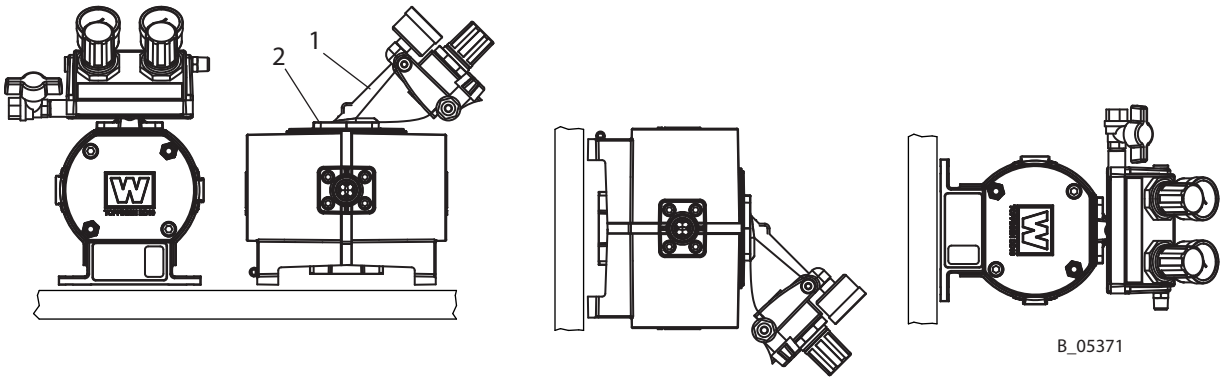

5.3 SCOPE OF DELIVERY

Order No.	Stk	Designation
-	1	TOPFINISH DD10 diaphragm pump
The standard equipment includes:		
see Chapter 15.3	1	Declaration of conformity
2366669	1	Operating manual German
see Chapter 1.3	1	Operating manual in the local language

The delivery note shows the exact scope of delivery.
Accessories: see Chapter 13.

5.4 DATA

5.4.1 MATERIALS OF PAINT-WETTED PARTS

Diaphragms	PA (polyamide)
Remaining material-wetted parts	Stainless steel

5.4.2 TECHNICAL DATA

Description	Units	TOPFINISH DD10
Pump ratio		1 : 1
Volume flow per double stroke (DH)	cm^3 cu inch	42.2 25.75
Maximum operating pressure	MPa bar psi	0.8 8 116
Air inlet pressure	MPa bar psi	0.15 – 0.8 1.5 – 8 22 – 116
Air inlet (inside thread)	inch	1/4"
Sound pressure level at 0.4 MPa; 4 bar; 58 psi air pressure*	dB(A)	58.4
Sound pressure level at 0.6 MPa; 6 bar; 87 psi air pressure*	dB(A)	61.6
Sound pressure level at 0.8 MPa; 8 bar; 116 psi air pressure*	dB(A)	64.0
Product inlet (inside thread)	inch	1/2"
Product outlet (inside thread)	inch	3/8"
Weight	kg; lb	4.1
Product pH value	pH	3.5 – 9
Product viscosity	DIN 4 sec	15 – 60
Product temperature	°C °F	4 – 60 39.2 – 140
Ambient temperature	°C °F	4 – 40 39.2 – 104
Allowable inclination for operation	∠°	± 10

* A-rated sound pressure level measured at 1 m distance, LpA1m according to DIN EN 14462: 2005. Reference measurements have been made by SUVA (Swiss Accident Insurance Institute).

Compressed air quality

Quality standard 7.5.4 according to ISO 8573.1: 2010	
7:	Solid particles with mass concentration of 5-10 mg/m^3
5:	Air humidity: pressure dew point ≤ +7 °C
4:	Oil content: ≤ 5 mg/m^3

⚠ WARNING

Exhaust air containing oil!
Risk of poisoning if inhaled.

→ Provide water-free and oil-free compressed air

5.4.3 DIMENSIONS AND CONNECTIONS

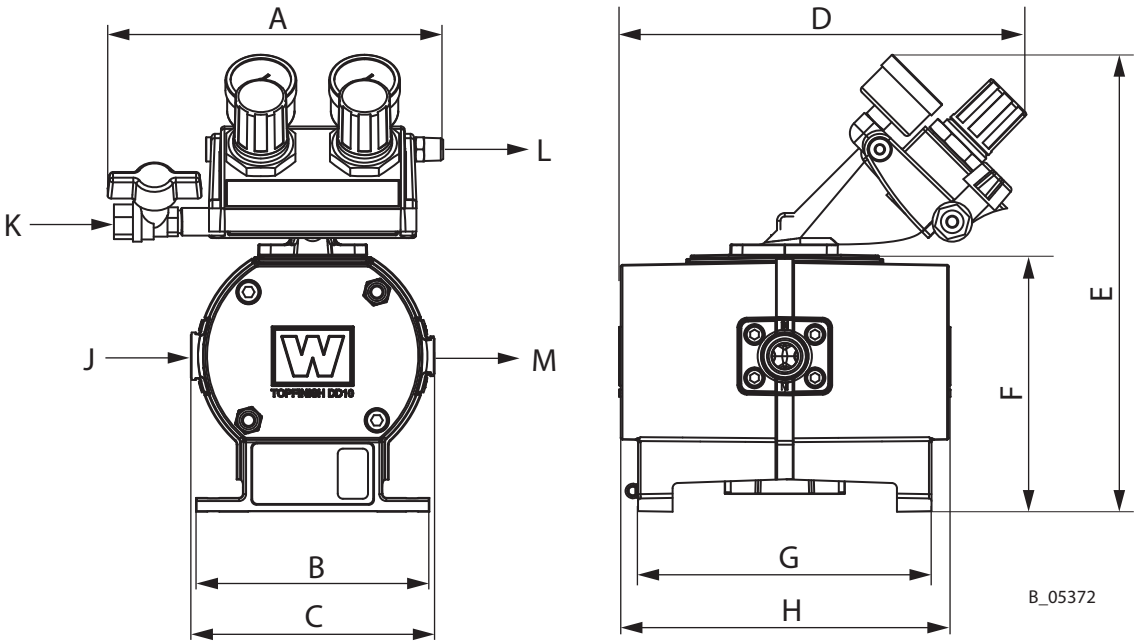

	TOPFINISH DD10 mm; inch
A	191; 7.52
B	135; 5.31
C	141; 5.55
D	236; 9.29
E	264; 10.39
F	149; 5.87
G	170; 6.69
H	192; 7.56
J	G1/2"
K	G1/4"
M	G3/8"

5.4.4 PERFORMANCE DIAGRAMS

Example

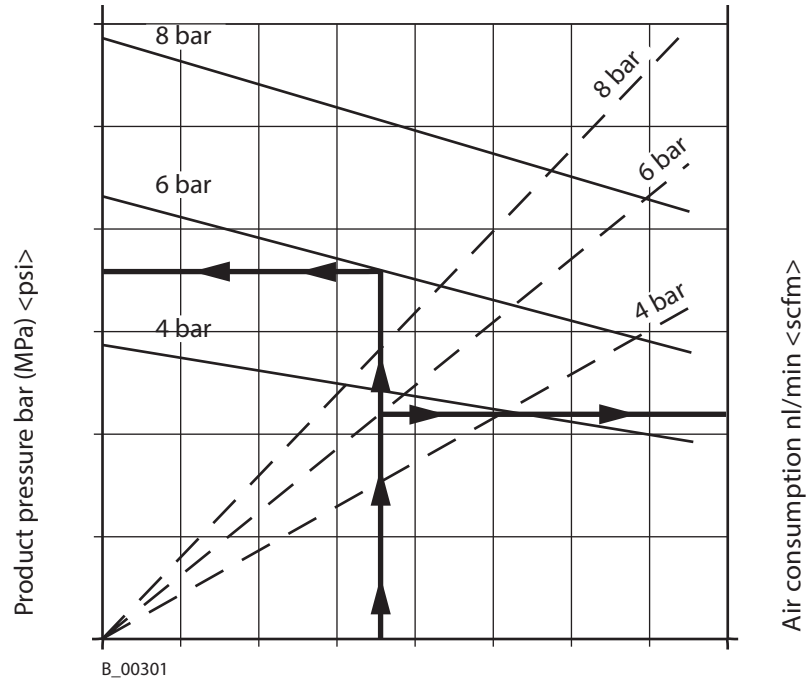

TOPFINISH DD10 diagram

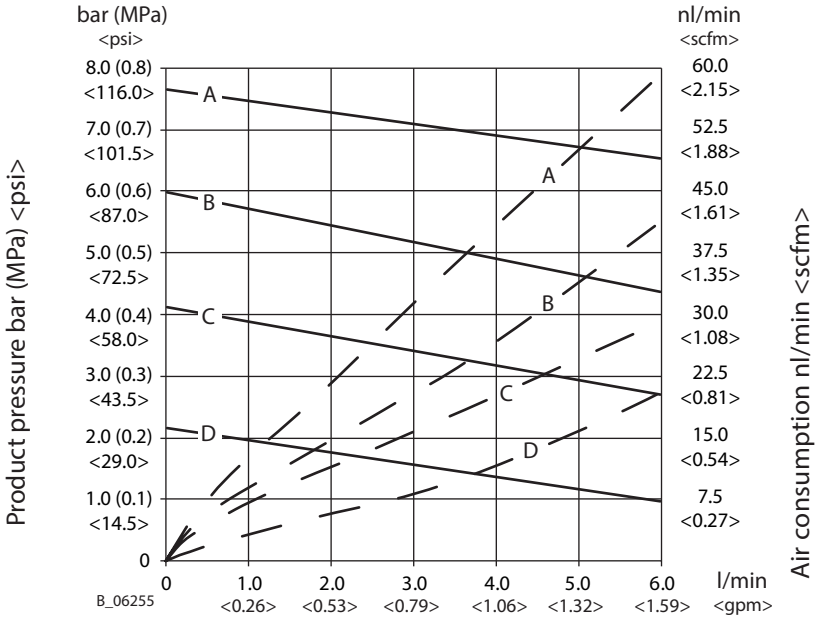

Material flow volume - water - water l/min <gpm>

A = 8 bar; 0.8 MPa; 116 psi air pressure
B = 6 bar; 0.6 MPa; 87 psi air pressure
C = 4 bar; 0.4 MPa; 58 psi air pressure
B = 2 bar; 0.2 MPa; 29 psi air pressure

5.5 PRESSURE REGULATOR UNIT FOR THE TOPFINISH DD10

1 Pressure gauge - pump
2 Pressure gauge - atomizing air
3 Pressure regulator - atomizing air
4 Pressure regulator - pump
5 Compressed air Inlet
6 Ball valve
7 Air outlet for gun air

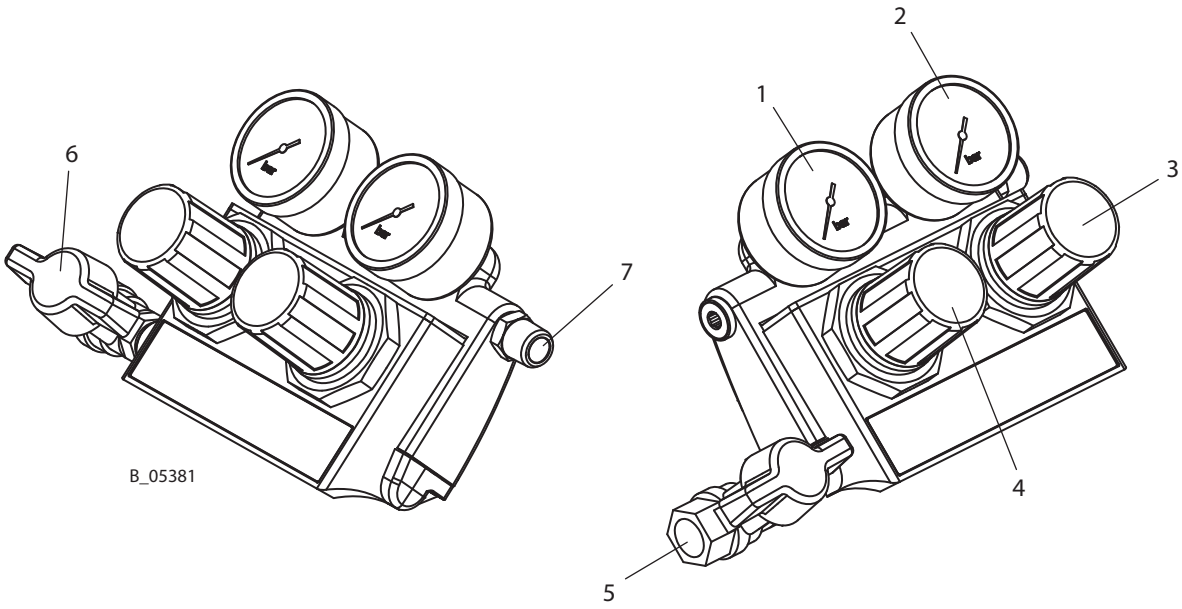

Positions of the ball valve

1 **Open**: working position
2 **Closed:** the air motor can still be under pressure.

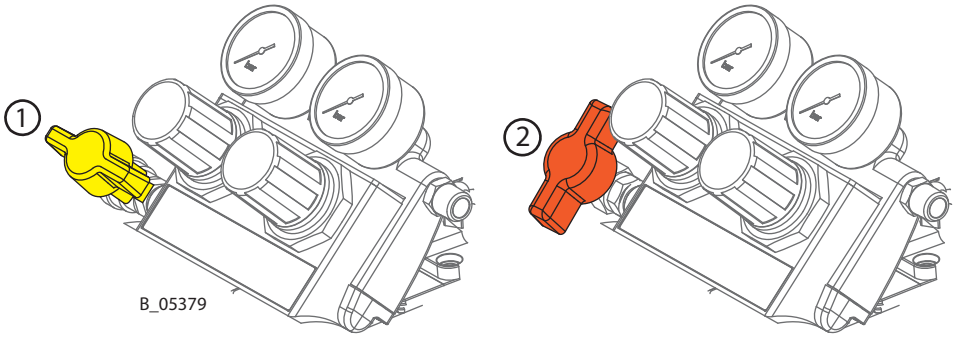

5.6 RETURN FLOW VALVE

Positions of the ball valve

1 **Open**: working position
2 **Closed:** the air motor can still be under pressure.

3 Material return line
4 Product outlet

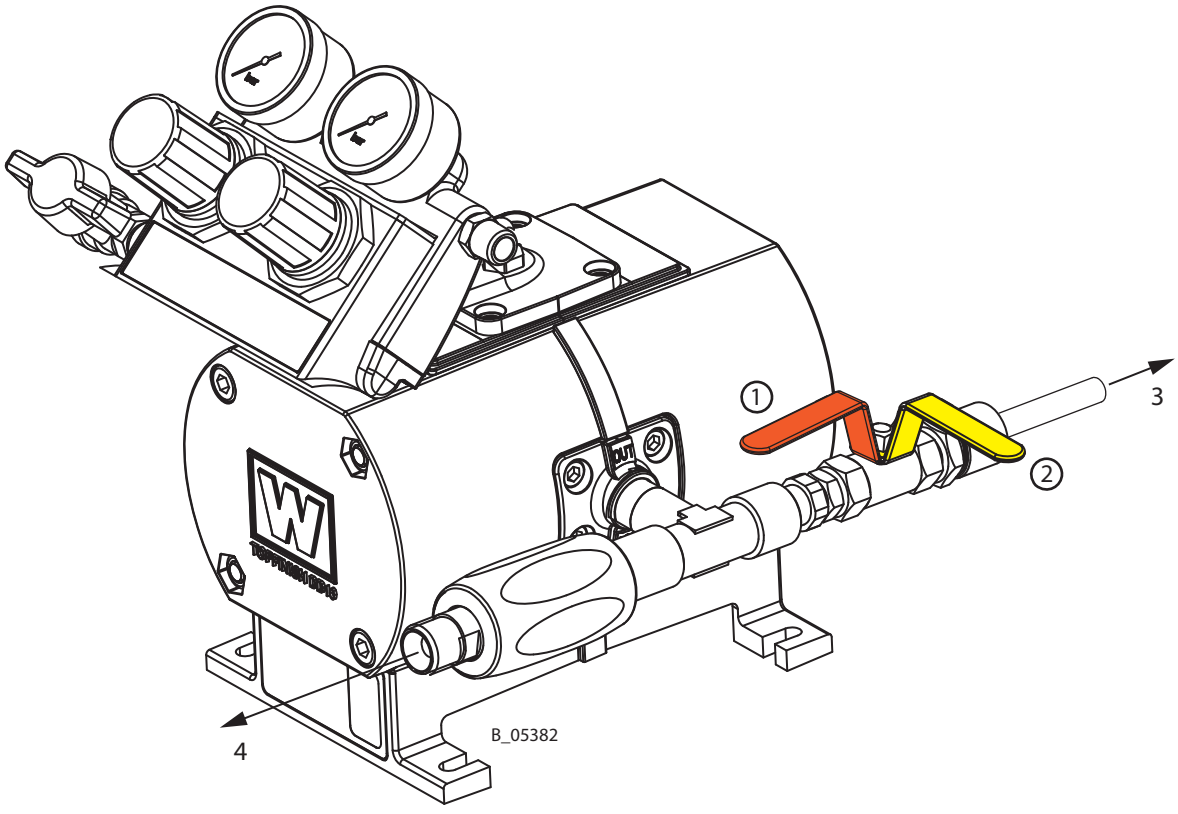

6 ASSEMBLING AND COMMISSIONING

6.1 TRAINING ASSEMBLY/COMMISSIONING STAFF

⚠ WARNING

Incorrect installation/operation!
Risk of injury and damage to the device.

→ The assembly and commissioning staff must have the technical skills to safely commission the device.
→ When assembling, commissioning and carrying out all work, read and follow the operating manuals and safety regulations for the additionally required system components.

A skilled person must check to ensure that the device is in a reliable state after it is installed and commissioned.

6.2 STORAGE CONDITIONS

Until the point of assembly, the device must be stored in a dry location, free from vibrations and with a minimum of dust. The device must be stored in closed rooms.

The air temperature at the storage location must be between -20 °C and +60 °C (-4 °F and +140 °F).

The relative air humidity at the storage location must be between 10 and 95% (without condensation).

6.3 INSTALLATION CONDITIONS

The air temperature at the installation site must be in a range between 0 °C and 40 °C; 32 °F and 132 °F.

The relative air humidity at the installation site must be between 10 and 95% (without condensation).

6.4 TRANSPORTATION

The pump can be moved on a trolley or manually without lifting equipment or a crane.

6.5 ASSEMBLY AND INSTALLATION

Note:
This pump can be used as part of a spraying system for Airless or AirCoat applications. The components can be found in the accessories list, provided that the system was not obtained as a spray pack.
The nozzles must be selected according to the gun instructions.

Procedure:

1. Mount the pump on a frame, trolley or wall mount.
2. Connect the suction system and air supply.
3. Connect the material and air supply of the gun in accordance with the operating manual.

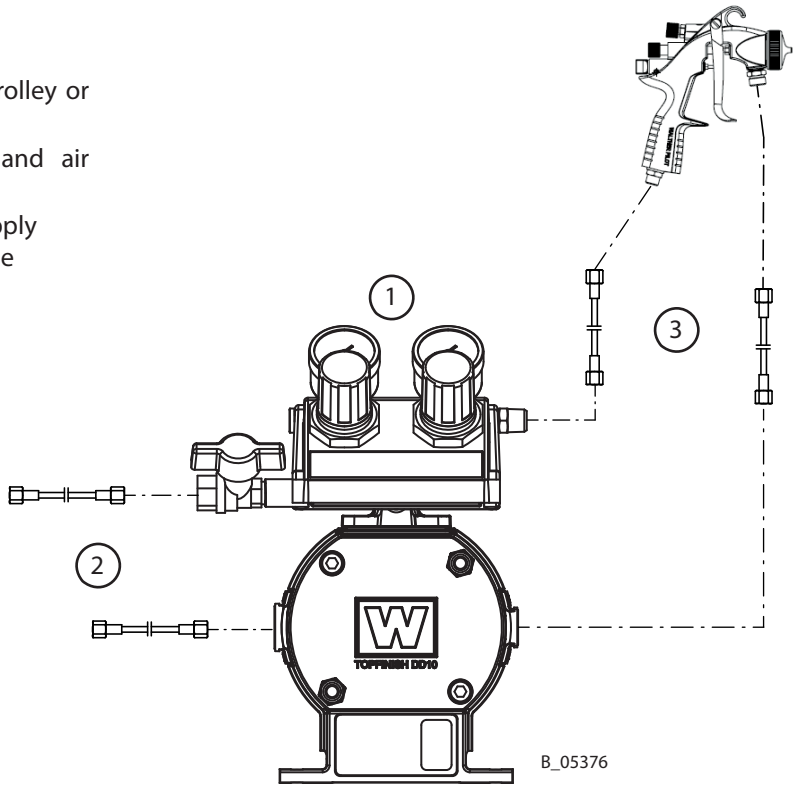

⚠	**⚠ WARNING** **Inclined ground!** Risk of accidents if the device rolls away/falls. → Position the trolley with the pump horizontally. → If the surface is inclined, position the feet of the trolley towards the gradient. → Secure the trolley.

6.5.1 VENTILATION OF THE SPRAY BOOTH

⚠ WARNING

Toxic and/or flammable vapor mixtures!
Risk of poisoning and burns.

→ Operate the device in a spray booth approved for the working materials.
-or-
→ Operate the device on an appropriate spraying wall with the ventilation (extraction) switched on.
→ Observe national and local regulations for the exhaust air speed.

6.5.2 AIR SUPPLY

You must ensure that only dry, clean atomizing air is used in the spray gun. Dirt and moisture in the atomizing air worsens the spraying quality and spraying pattern.

⚠ WARNING

Hose connections!
Risk of injury and damage to the device.

→ Do not exchange hose connections of product hose and air hose.

6.5.3 PRODUCT SUPPLY

⚠ DANGER

Bursting hose, bursting threaded joints!
Danger to life from injection of product.

→ Ensure that the hose material is chemically resistant to the sprayed products.
→ Ensure that the spray gun, threaded joints and product hose between the device and the spray gun are suitable for the pressure generated in the device.
→ Ensure that the following information can be seen on the high-pressure hose:
- Manufacturer
- Permissible operating pressure
- Date of manufacture.

6.6 GROUNDING

⚠ WARNING

Discharge of electrostatically charged components in atmospheres containing solvents!
Explosion hazard from electrostatic sparks.

→ Clean the pump only with a damp cloth.

⚠ WARNING

Heavy paint mist if grounding is insufficient!
Danger of poisoning.
Insufficient paint application quality.

→ Ground all device components.
→ Ground the work pieces to be coated.

Grounding scheme (example)

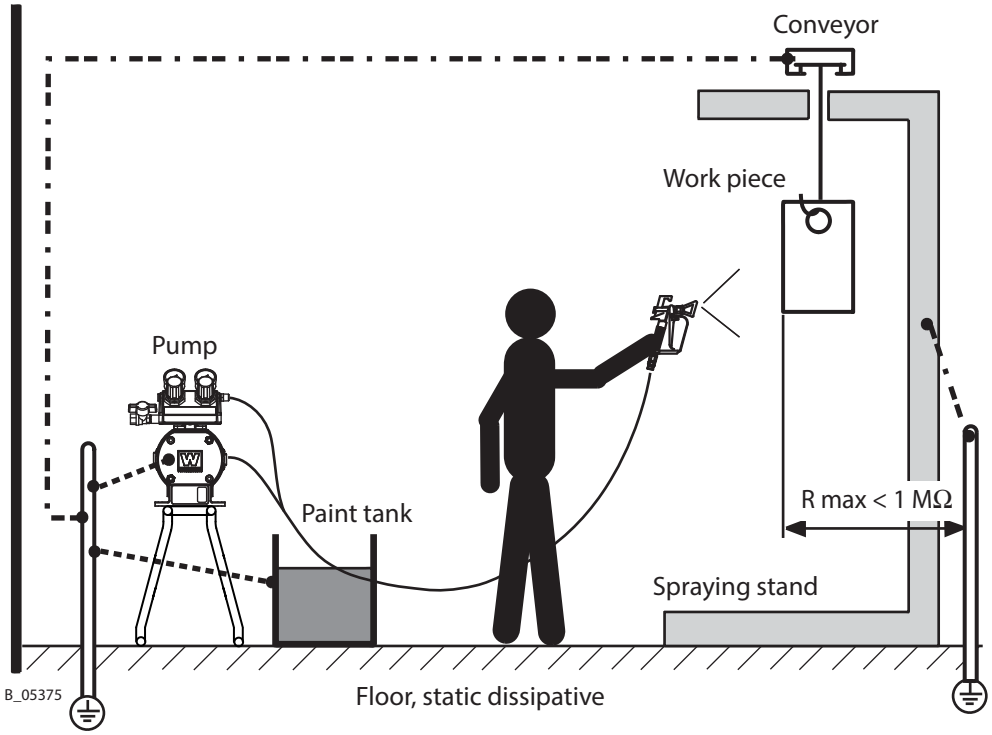

Cable cross sections

Pump	4 mm²; AWG 12	Conveyor	16 mm²; AWG 6
Product tank	6 mm²; AWG10	Booth	16 mm²; AWG 6
		Spraying stand	16 mm²; AWG 6

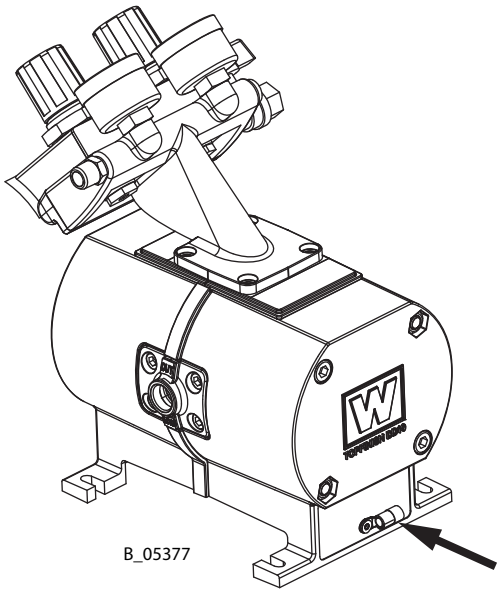

Procedure:

1. Screw on grounding cable with eye.
2. Clamp the grounding cable clip to a grounding connection on site.
3. Ground the product (paint) tank to an on-site grounding connection.
4. Ground the other parts of the system to an on-site grounding connection.

6.7 SAFETY CHECKS

→ Carry out safety checks in accordance with Chapter 8.2.3.

Before every start-up, the following points should be observed:

- Secure gun with safety clip.
- Check the permissible pressures.
- Check all connections for leaks.
- Check hoses for damage.

It should be ensured that the device is in the following state before carrying out any work on it:

- The pressure should be released from the pump and high-pressure hose with gun.
- The gun should be secured with the safety clip.
- The air supply should be interrupted.

Pressure tightness test

→ For pressure tightness control of the entire installation, the flushing agent product pressure is slowly increased step by step until the product pressure of the pump indicated on the type plate is reached.

⚠ WARNING

Overpressure!
Risk of injury from bursting components.

→ The operating pressure must not exceed the value shown on the type plate.

6.8 COMMISSIONING

6.8.1 SAFETY INSTRUCTIONS

Every time before starting up, the following points should be observed as laid down in the operating manual:

- Observe all safety regulations in accordance with Chapter 4.
- Carry out commissioning properly.

⚠ WARNING

Toxic and/or flammable vapor mixtures!
Risk of poisoning and burns.

→ Operate the device in a spray booth approved for the working materials.
-or-
→ Operate the device on an appropriate spraying wall with the ventilation (extraction) switched on.
→ Observe national and local regulations for the exhaust air speed.

⚠ WARNING

Gas mixtures can explode if there is an incompletely filled pump!
Danger to life from flying parts.

→ Ensure that the pump and suction system are always completely filled with cleaning agent or working medium.
→ Do not spray the device empty after cleaning.

6.8.2 PRELIMINARY OPERATIONS

NOTICE

Impurities in the spraying system!
Spray gun blockage.

→ Flush the spray gun and paint supply with a suitable flushing agent before commissioning.

6.8.3 BASIC CLEANING

Procedure

1. Visual check: personal safety equipment, grounding and all devices ready to use. 2. Place an empty, grounded collection tank (7) under the return tube (6). 3. Place the suction hose (3) in the grounded tank with flushing agent (4). 4. Adjust the pressure regulator (1) to approx. 0.2 MPa; 2 bar; 29 psi.
Flush via the return flow valve 5. Open return valve (5). 6. Slowly open the ball valve (8). 7. Adjust the air pressure on the pressure regulator (1) so that the pump runs smoothly. 8. Flush the system until clean flushing agent flows into the tank (7). 9. Close ball valve (8). 10. As soon as there is no pressure remaining in the system, close the return valve (5).
Flush using gun 11. Point the spray gun, without nozzle, into the tank (7) and open it. 12. Slowly open the ball valve (8). 13. Rinse until clean flushing agent flows from the gun. 14. Close ball valve (8). 15. As soon as there is no pressure in the system, close the gun. 16. Secure the gun.
17. Dispose of the contents of the tank (7) according to the local regulations.

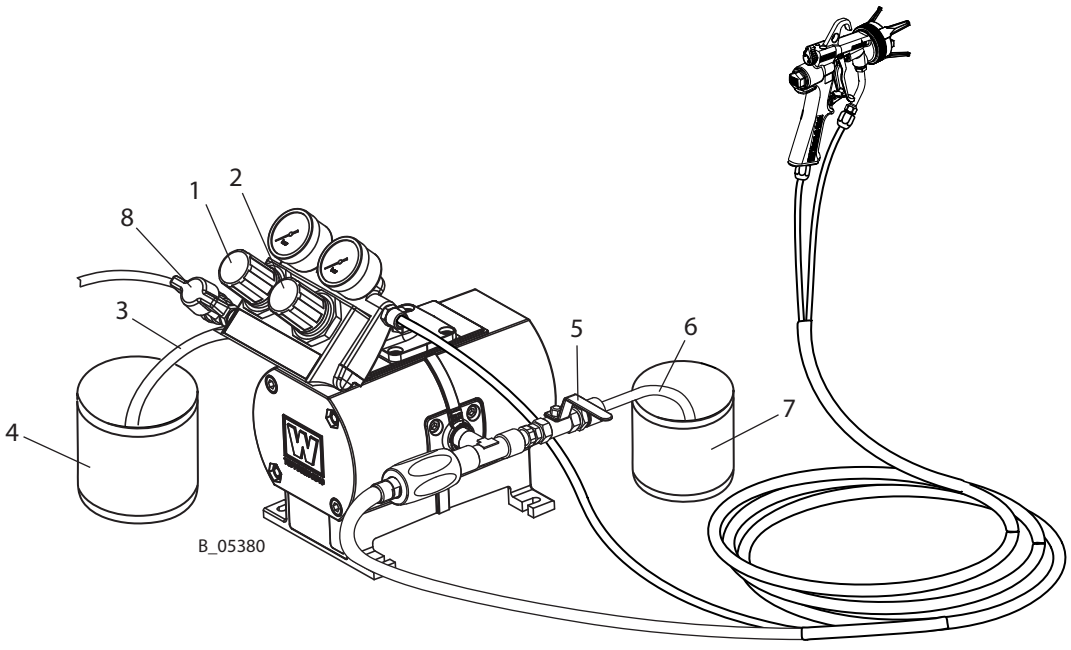

6.8.4 FILLING WITH WORKING MATERIAL

1. Place the suction hose in the tank with the working material (1).
2. Slowly open the ball valve (3).
3. Adjust the pressure regulator (2) to approx. 0.2 MPa; 2 bar; 29 psi.
4. Point the gun, without nozzle, into an empty tank and open it.
5. Close ball valve (3) as soon as pure working material starts coming from the gun.
6. When there is no pressure remaining in the system, close the gun.
7. Secure the gun.

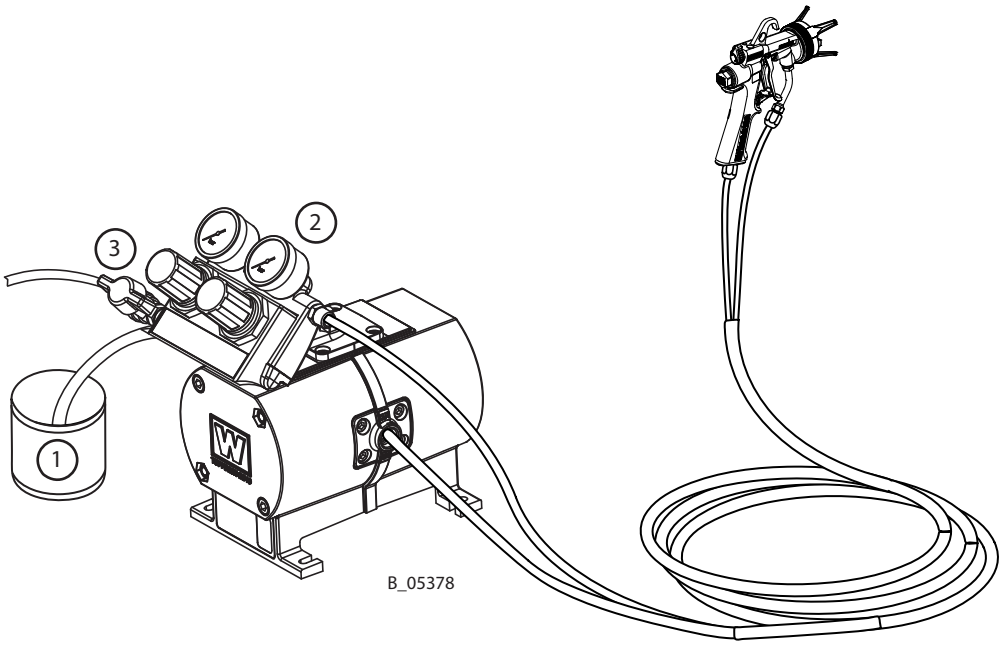

7 OPERATION

7.1 TRAINING THE OPERATING STAFF

⚠ WARNING

Incorrect operation!
Risk of injury and damage to the device.

→ The operating staff must be qualified to operate the entire system.
→ The operating staff must be familiar with the potential risks associated with improper behavior as well as the necessary protective devices and measures.
→ Before work commences, the operating staff must receive appropriate system training.

7.2 SAFETY INSTRUCTIONS

→ Observe safety instructions in Chapter 4.

⚠ WARNING

Incorrect operation!
Risk of injury and damage to the device.

→ If contact with solvent-based paints or cleaning agents causes skin irritation, appropriate precautionary measures must be taken, e.g., wearing protective clothing.
→ The footwear worn by operating staff must comply with EN ISO 20344. The measured insulation resistance must not exceed 100 megohms.
→ The protective clothing, including gloves, must comply with EN ISO 1149-5. The measured insulation resistance must not exceed 100 megohms.

⚠ WARNING

Unintentional putting into operation!
Risk of injury.

Before any work on the device, in the event of work interruptions and malfunctions:
→ Switch off the energy/compressed air supply.
→ Relieve the pressure from the spray gun and unit.
→ Secure the spray gun against actuation.
→ In the event of functional faults: remedy the fault as described in the "Troubleshooting" chapter.

7.3 WORKING

1. Secure gun and place nozzle in the gun.
2. Slowly open the ball valve.
3. Set the required working pressure on the pressure regulator.
4. Optimize the spraying results as laid down in the gun instructions.
5. Start work process.

7.4 PRESSURE RELIEF/WORK INTERRUPTION

7.4.1 PRESSURE RELIEF/WORK INTERRUPTION

The pressure must always be relieved when:
- The spraying tasks are finished.
- Servicing the system.
- Carrying out cleaning tasks on the system.
- Moving the system to another location.
- Something needs to be checked on the system.
- The nozzle is removed from the gun.

→ Observe general safety instructions in Chapter 4.

Process for relieving pressure

1. Close gun.
2. Close ball valve.
3. Vent the pump.
4. Release the system by opening the gun.
5. Close and secure gun.

If the system has been used with 2-component materials:

NOTICE

Hardened product in the spraying system when 2-component product is processed!
Destruction of pump and injection system.

→ Follow the manufacturer's processing rules, particularly regarding the pot life.
→ Flush thoroughly before the end of the pot life.
→ The pot life is decreased by warmth.

8 CLEANING AND MAINTENANCE

8.1 CLEANING

8.1.1 CLEANING STAFF

Cleaning work should be undertaken regularly and carefully by qualified and trained staff. They should be informed of specific hazards during their training.

The following hazards may arise during cleaning work:

- Health hazard from inhaling solvent vapors
- Use of unsuitable cleaning tools and aids

8.1.2 SAFETY INSTRUCTIONS

⚠ WARNING

Brittle filter pressure regulator!
The tank on the filter pressure regulator becomes brittle through contact with solvents and can burst.
Flying parts can cause injury.

→ Do not clean the tank on the filter pressure regulator with solvent.

⚠ WARNING

Gas mixtures can explode if there is an incompletely filled pump!
Danger to life from flying parts.

→ Ensure that the pump and suction system are always completely filled with cleaning agent or working medium.
→ Do not spray the device empty after cleaning.

DANGER

Incorrect maintenance/repair!
Danger to life and equipment damage.

- → Only a WAGNER service center or a suitably trained person may carry out repairs and replace parts.
- → Only repair and replace parts that are listed in the "Spare parts" chapter and that are assigned to the unit.
- → Before all work on the device and in the event of work interruptions:
  - Switch off the energy supply and the compressed air supply.
  - Relieve the pressure from the spray gun and device.
  - Secure the spray gun against actuation.
- → Observe the operating and service manual for all work.

→ Observe safety instructions in Chapter 4.

8.1.3 CLEANING AND FLUSHING DEVICE

Note:
The device should be cleaned for maintenance purposes, etc. Ensure that no remaining product dries on and sticks to the device.

Procedure:
1. Carry out work interruption -> Chapter 7.4.
2. Carry out the basic flushing -> Chapter 6.8.3.
3. Maintain the gun according to the operating manual.
4. Clean and check the suction system and the suction filter.
5. Clean the outside of the system.
6. Put the whole system back together.
7. Fill the system with cleaning agent according to Chapter 6.8.4 "Filling with Working Material".

8.1.4 LONG-TERM STORAGE

If storing the system for a prolonged period of time, thorough cleaning and corrosion protection are necessary. Replace the water or solvent in the product pump with a suitable preserving oil and fill the separating agent cup with separating agent.

Procedure:
1. Carry out points 1 to 7 in Chapter 8.1.3 "Flushing and Cleaning Device".
2. Flushing with preserving fluid according to Chapter 6.8.3.

8.2 MAINTENANCE

8.2.1 MAINTENANCE STAFF

Maintenance work should be undertaken regularly and carefully by qualified and trained staff. They should be informed of specific hazards during their training.

The following hazards may arise during maintenance work:

- Health hazard from inhaling solvent vapors
- Use of unsuitable tools and aids

An authorized person must ensure that the device is checked for being in a reliable state after maintenance work is completed.

8.2.2 SAFETY INSTRUCTIONS

→ Observe the safety instructions in Chapter 4 and Chapter 8.1.2.

Prior to maintenance

- Flush and clean the system. → Chapter 8.1.3.

After maintenance

- Carry out a safety checks in accordance with Chapter 8.2.3.
- Put the system into operation and check for leaks as described in Chapter 6.7.
- Carry out a function test, if required, in accordance with Chapter 11.

→ According DGUV regulation 100-500:

- The liquid ejection devices should be checked by an expert (e.g., WAGNER service technician) for their safe working conditions as required and at least every 12 months.
- For shut down devices, the examination can be suspended until the next start-up.

DANGER

Incorrect maintenance/repair!
Danger to life and equipment damage.

→ Only a WAGNER service center or a suitably trained person may carry out repairs and replace parts.
→ Only repair and replace parts that are listed in the "Spare parts" chapter and that are assigned to the unit.
→ Before all work on the device and in the event of work interruptions:
- Switch off the energy supply and the compressed air supply.
- Relieve the pressure from the spray gun and device.
- Secure the spray gun against actuation.
→ Observe the operating and service manual for all work.

8.2.3 SAFETY CHECKS

WAGNER recommends having all spraying devices checked annually by a technical expert (e.g., a WAGNER service technician) for safety reasons.

8.2.3.1 GROUNDING CHECK

Daily
Before starting work, carry out a visual check to ensure that the grounding connection is present in the device and in all relevant components.

8.2.3.2 PRODUCT HOSES, TUBES AND COUPLINGS

DANGER

Bursting hose, bursting threaded joints!
Danger to life from injection of product and from flying parts.

→ Ensure that the hose material is chemically resistant to the sprayed products and the used flushing agents.
→ Ensure that the spray gun, threaded joints, and product hose between the device and the spray gun are suitable for the generated pressure.
→ Ensure that the following information can be seen on the hose:
- Manufacturer
- Permissible operating pressure
- Date of manufacture.

The service life of the complete hoses between product pressure generator and application device is reduced due to environmental influences even when handled correctly.

→ Check hoses, pipes, and couplings every day and replace if necessary.
→ Before every commissioning, check all connections for leaks.
→ Additionally, the operator must regularly check the complete hoses for wear and tear as well as for damage at intervals that he/she has set. Records of these checks must be kept.
→ The complete hose is to be replaced as soon as one of the two following intervals has been exceeded:
– 6 years from the date of the hose crimping (see fitting embossing).
– 10 years from the date of the hose imprinting.

Fitting embossing	Meaning
xxx bar	Pressure
yymm	Crimping date (year/month)
XX	Internal code

Hose imprinting	Meaning
WAGNER	Name / Manufacturer
yymm	Date of manufacture (year/ month)
xxx bar (xx MPa) e.g., 270 bar (27 MPa)	Pressure
XX	Internal code
DNxx (e.g., DN10)	Nominal diameter

8.3 DIAPHRAGM REPLACEMENT

1. Unscrew the four screws (1) and remove the plate (2) from the pump.
2. Unscrew the four screws (3) and remove the plate (4) from the pump.
3. Unscrew the Allen screws (3) on both halves of the pump housing.
4. Pull the pump housing (4) apart.
5. The components (5) can be removed from the two housing halves with gentle movements.

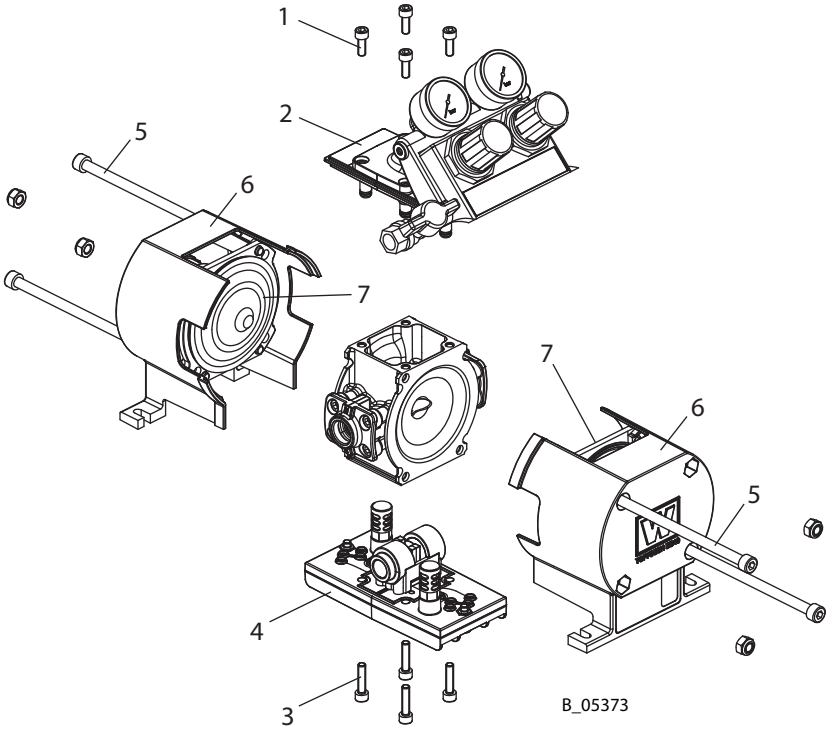

6. Unscrew the screws (8) on both components.
7. The diaphragms (9) can now be removed from the components and can be replaced.
8. Re-assemble the pump in reverse order.

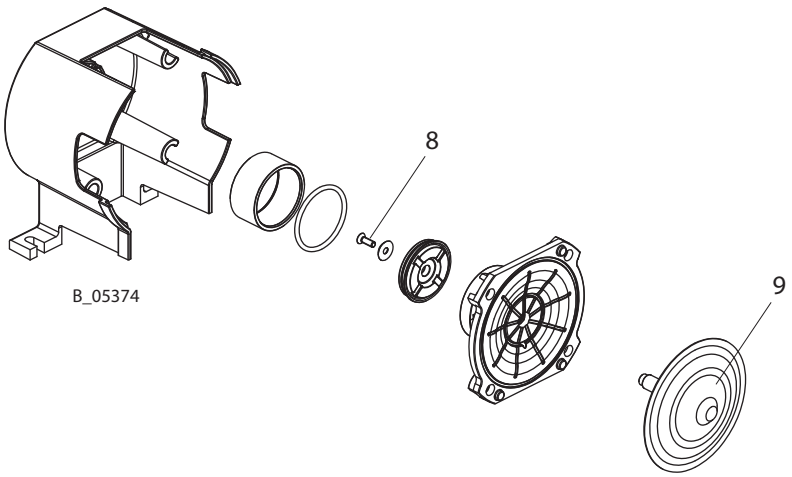

8.4 REPLACING THE INLET AND OUTLET VALVES

1. Unscrew the screws (1).
2. Remove the valve housing (2).
3. Replace the component (3).
4. Re-assemble the pump in reverse order.

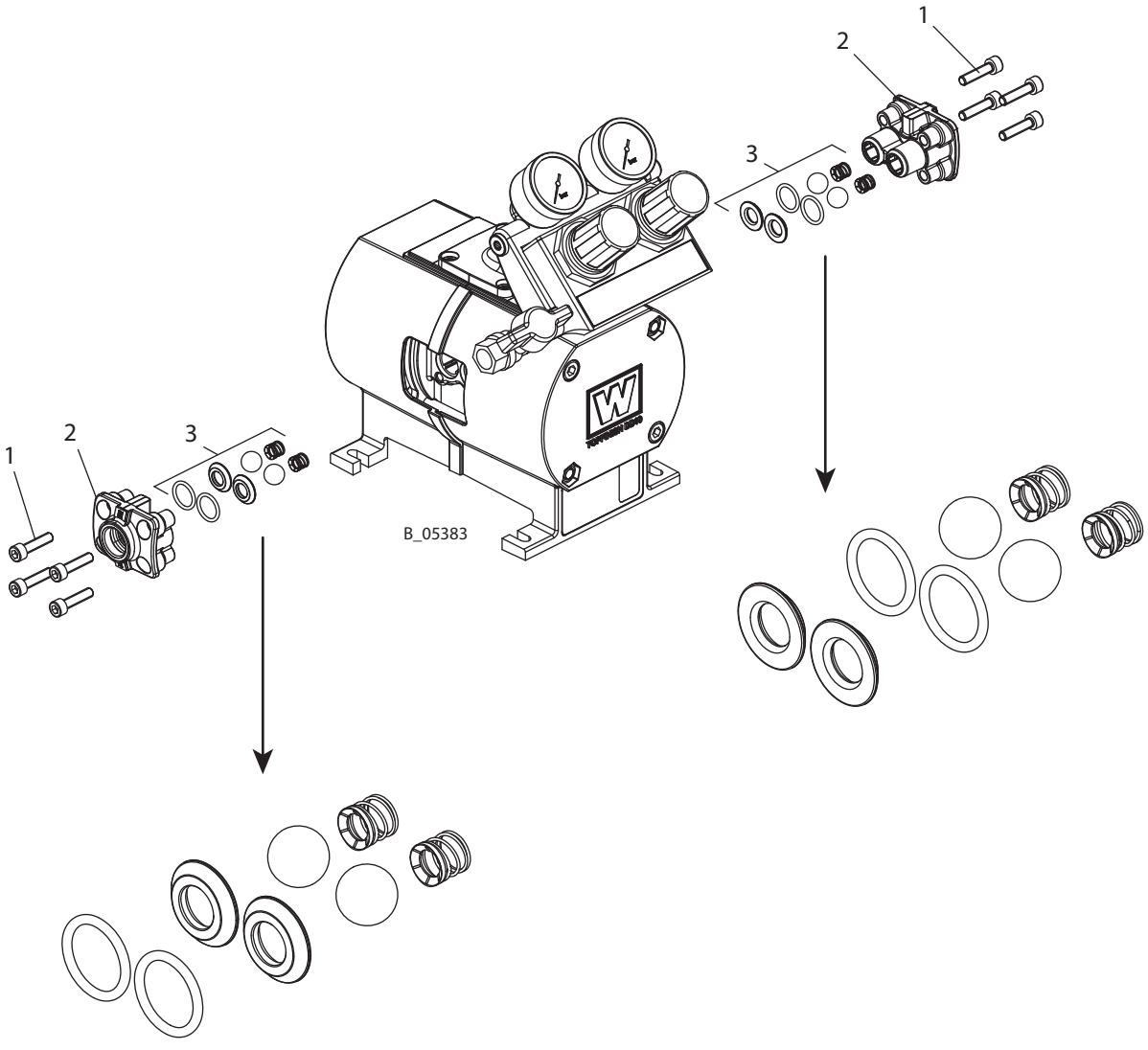

9 TROUBLESHOOTING, MAINTENANCE AND REPAIR

9.1 TROUBLESHOOTING AND RECTIFICATION

Problem	Cause	Remedy
The pump does not work.	The pump does not start or stops.	Open and close ball valve on the pressure regulator unit or briefly disconnect compressed air supply.
	No pressure indication on the pressure gauge (air pressure regulator defective).	Disconnect compressed air supply briefly or repair or change pressure regulator.
	Spray nozzle is clogged.	Clean the nozzle according to the instructions.
	Insufficient compressed air supply.	Check compressed air supply.
	Filter insert in spray gun is clogged.	Clean the parts and use a suitable working material.
	The fluid section or high-pressure hose is blocked (e.g., the 2K product has hardened).	Dismount and clean fluid section, replace high-pressure hose.
	Grease in spool and sleeve assembly. Pump stops at the stroke end occasionally.	Degrease spool and sleeve assembly. Check detent body.
Poor spray pattern.	See the gun instructions.	
Irregular operation of product pump: spray jet collapses (pulsation)	Viscosity is too high.	Thin spraying product.
	Spraying pressure is too low.	Increase incoming air pressure. Use a smaller nozzle.
	Valves are clogged.	Press valve depressor. Clean product pump and leave to soak in cleaning agent if necessary.
	Foreign body in suction valve.	Dismantle suction valve housing, clean and check valve seat.
	Diameter of compressed air line too small.	Assemble a larger supply line -> Technical data, see Chapter 5.4.2.
	Valves or packings are worn out.	Replace the parts.
	Control air filter or work air filter is clogged.	Check filter and clean it if necessary.
Strongly irregular operation of product pump.	Diaphragms "blocked" because suction is too fast.	Operate pump with ball valve opened a minimal amount for a while.
The pump runs evenly, does not however, suck up product.	The suction system's union nut is loose; the pump is taking in air.	Tighten.
	Suction filter is clogged.	Clean filter.
	Valves are clogged.	Press valve depressor. Clean product pump and leave to soak in cleaning agent if necessary.

Problem	Cause	Remedy
Pump runs fast when the spray gun is closed.	Valves worn.	Replace the parts.
Loss of power due to severe icing.	There is a lot of condensation water in the air supply.	Install a water separator.

If none of the causes of malfunction mentioned are present, the defect can be remedied by a WAGNER Service Center.

10 REPAIR WORK

10.1 REPAIR STAFF

Repair work should be undertaken carefully by qualified and trained personnel. They should be informed of specific hazards during their training.

The following hazards may arise during repair work:

- Health hazard from inhaling solvent vapors
- Use of unsuitable tools and aids

A skilled person must check to ensure that the device is in a reliable state after it is repaired. Carry out function test in accordance with Chapter 11.

10.2 SAFETY INSTRUCTIONS

→ Observe the safety instructions in Chapter 4 and Chapter 8.1.2.

Before a Repair

- Flush and clean the system. → Chapter 8.1.3.

After a Repair

- Carry out a safety checks in accordance with Chapter 8.2.3.
- Put the system into operation and check for leaks as described in Chapter 6.7.
- Function test in accordance with Chapter 11.

→ According DGUV regulation 100-500:

- The liquid ejection devices should be checked by an expert (e.g., WAGNER service technician) for their safe working conditions as required and at least every 12 months.
- For shut down devices, the examination can be suspended until the next start-up.

DANGER

Incorrect maintenance/repair!
Danger to life and equipment damage.

→ Only a WAGNER service center or a suitably trained person may carry out repairs and replace parts.
→ Only repair and replace parts that are listed in the "Spare parts" chapter and that are assigned to the unit.
→ Before all work on the device and in the event of work interruptions:
- Switch off the energy supply and the compressed air supply.
- Relieve the pressure from the spray gun and device.
- Secure the spray gun against actuation.
→ Observe the operating and service manual for all work.

10.3 CLEANING THE PARTS AFTER DISASSEMBLY

ATTENTION

Please note:

→ All reusable parts (except for the electrical components) should be cleaned thoroughly using a suitable cleaning agent.
→ Spare parts may have safety-relevant properties.
→ Defective parts, O-rings and seal sets must always be re-placed.

WARNING

Incompatibility of cleaning agent and working medium!
Risk of explosion and danger of poisoning by toxic gases.

→ Examine the compatibility of the cleaning agents and working media on the basis of the safety data sheets.

In Chapter 14 the order numbers for device spare parts can be found, as well as for wearing parts such as seals.

→ Use torques, greases and glues in accordance with Chapter 14.

11 FUNCTION TEST AFTER THE REPAIR

After all repairs, the device must be checked for safe condition before recommissioning. The necessary scope of inspection and testing depends on the repair carried out and must be documented by the repair staff.

Activities	Aid tools
1.1 EX-relevant inspections - Check mass connection between grounding connection of the pump and the frame/trolley and between the individual components of the frame/trolley: <100kΩ !! These inspections are Ex - relevant!!	Ohmmeter
1.2 Testing for Leaks - Connect the pump to the air supply 6 bar. To perform a leak test on the device, the product pressure with the flushing agent is slowly increased in increments until the maximum pressure indicated on the type plate is reached. Close pump outlet. Allow to stand in this position for 0.5-1 minute and listen for audible blowing off. Close air-supply ball-valve without relieving and check for pressure-loss.	Air motor: Test medium compressed air Leak spray Fluid section: Test medium: suitable flushing agent
1.3 General Inspections - Check tightening torque of various screws. - Check all threaded connections. - Empty the device completely and relieve pressure. - Check function of frame or transport trolley.	Torque wrench Visual check

12 DISPOSAL

When the equipment must be scrapped, please differentiate the disposal of the waste materials.
The following materials have been used:

- Stainless steel
- Aluminum
- Plastics
- Carbide

Consumable products (lacquers, adhesives, flushing and cleaning agents, solvents) must be disposed of in accordance with all applicable legal requirements.

13 ACCESSORIES

The following accessories are available for the TOPFINISH DD10 pump:

Designation	Order No.
Hi Boy	2368206
Lo Boy	2368231
Wall mount	2368422
Circulation	2368428
5 liter hopper	2368487
2 liter hopper	2368788
Product distributor 4-fold	2369013
Suction hose	2369022
Sliding tables	2368424
Filter	2368427
Filter with circulation	2368434
Distributor for 2 guns	2368439
Product pressure regulator, manual	T6232.00
FFC - Fine Flow Control	2368735
Drum cover	2368238
Agitator Ex	2370629
Agitator non-ex	T6233.00

14 SPARE PARTS

14.1 HOW CAN SPARE PARTS BE ORDERED?

Always supply the following information to ensure delivery of the right spare part:

Order number, designation and quantity
The quantity need not be the same as the number given in the quantity column "**Stk**" on the list. This number merely indicates how many of the respective parts are used in each component.

The following information is also required to ensure smooth processing of your order:
- Address for the invoice
- Address for delivery
- Name of the person to be contacted in the event of any queries
- Type of delivery (normal mail, express delivery, air freight, courier etc.)

Identification in spare parts lists.

Explanation of column "**K**" (labeling) in the following spare parts lists:

◆ Wearing parts
Note: Wear parts are not included in the warranty terms.

● Not part of standard equipment, available, however, as additional extra.

⚠ WARNING

Incorrect maintenance/repair!
Risk of injury and damage to the device.

→ Repairs and part replacement may only be carried out by specially trained staff or a WAGNER service center.
→ Before all work on the device and in the event of work interruptions:
- Switch off the energy/compressed air supply.
- Relieve the pressure from the spray gun and device.
- Secure the spray gun against actuation.
→ Always follow the operating and service instructions at all times when carrying out work.

14.2 OVERVIEW

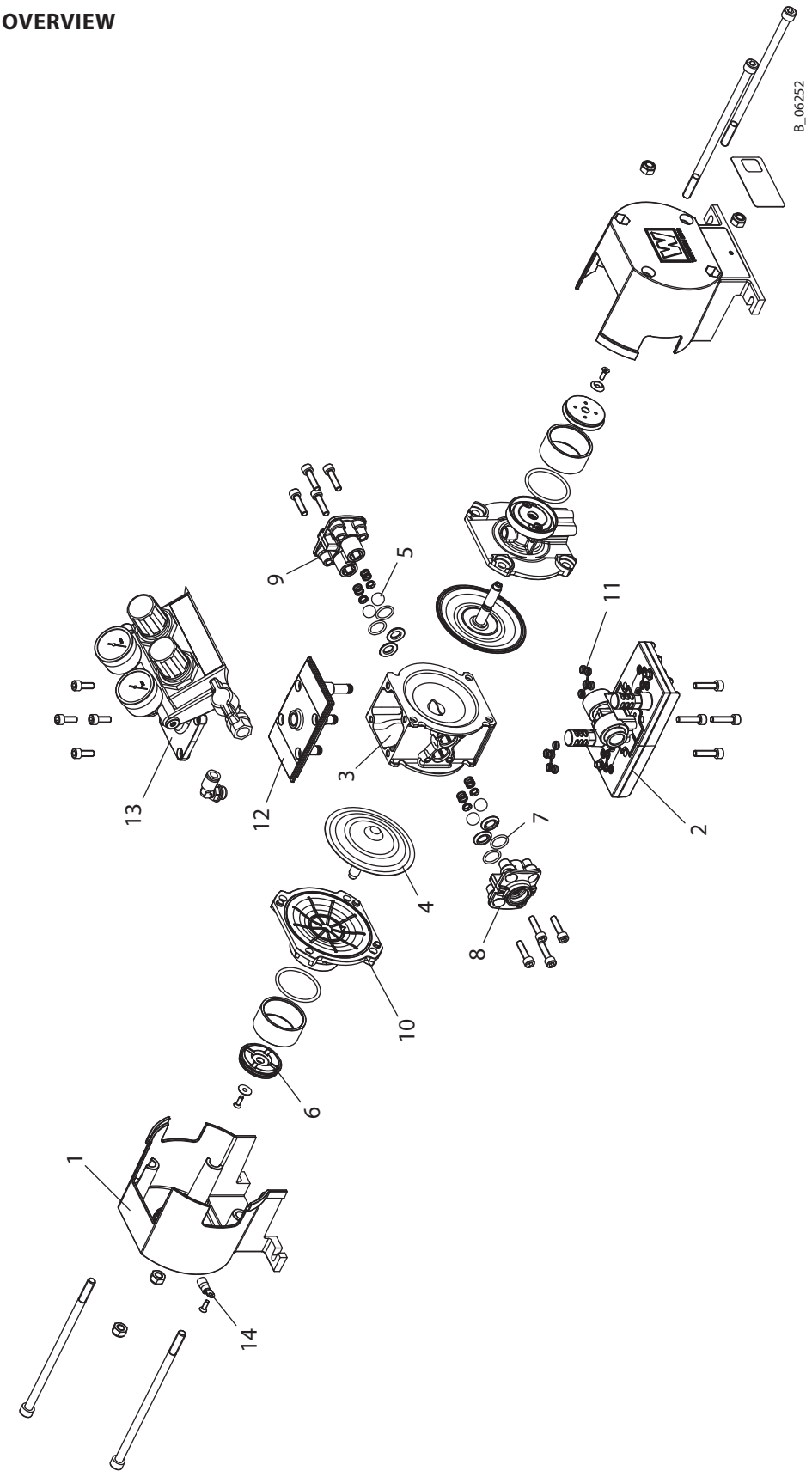

Spare part sets*

Pos	Designation	Order No.
1	Cover spare parts set	2370189
2	Selection spare parts set	2370193
3	Liquidbody spare parts set	2370195
4	Diaphragm spare parts set	2370200
5	Valve spare parts set	2370202
6	Air piston spare parts set	2370203
7	Product sealing spare parts set	2370181
8	Inlet spare parts set	2370212
9	Outlet spare parts set	2370214
10	Airbody spare parts set	2370215
11	Shaped packing spare parts set	2370219
12	Distributor spare parts set	2370220
13	Regulator unit spare parts set	2370221
14	Grounding spare parts set	2370222

For details, see Chapter 14.3

14.3 SPARE PART SETS

Cover spare parts set

Pos	K	Stk	Designation	Order No.
1		1	Cover spare parts set	2370189
2		2	Cover	–
3		4	Screw, M8x180	–
4		4	Nut, M8	–
5		1	Type plate	–
6		1	Cable lug	–
7		1	Screw for cable lug	–

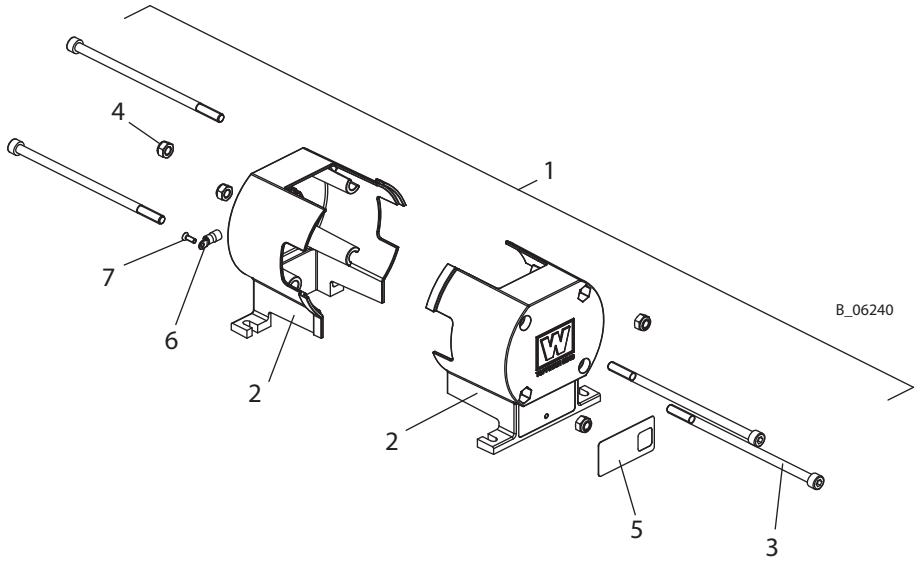

Selection spare parts set

Pos	K	Stk	Designation	Order No.
1		1	Selection spare parts set	2370193
2		1	Switch unit preassembled	–
3		2	Shaped packing	–
4		4	Screw	–

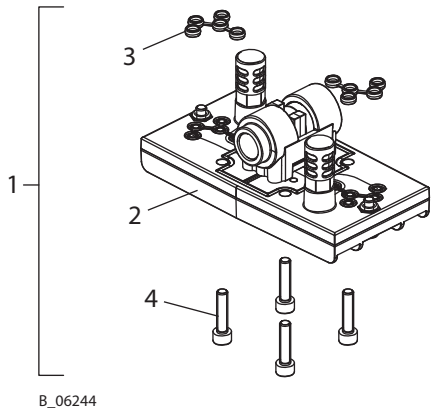

Liquidbody spare parts set

Pos	K	Stk	Designation	Order No.
1		1	Liquid body	2370195

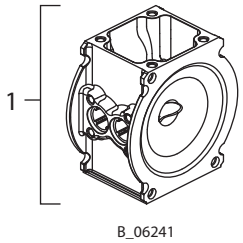

Diaphragm spare parts set

Pos	K	Stk	Designation	Order No.
1		1	Diaphragm spare parts set	2370200
2	◆	2	Diaphragms	–
3		2	Washer	–
4		2	Screw	–
5		1	Loctite® 222	–

◆ = Wearing part

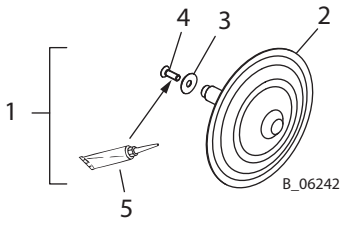

Valve spare parts set

Pos	K	Stk	Designation	Order No.
1	◆	1	Valve spare parts set	2370202
2		4	Valve seat	–
3		4	Ball	–
4		4	Spring support ring	–
5		4	Spring	–
6		4	O-ring	–

◆ = Wearing part

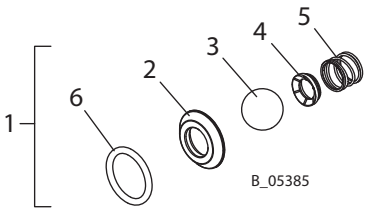

Air piston spare parts set

Pos	K	Stk	Designation	Order No.
1	◆	1	Air piston spare parts set	2370203
2		2	Air piston	–
3		2	Air cylinder	–
4		2	O-ring, 42x3	–

◆ = Wearing part

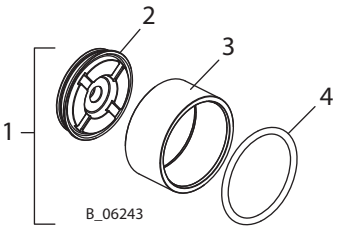

Product sealing spare parts set

Pos	K	Stk	Designation	Order No.
1		1	Product sealing spare parts set	2370181
2	◆	4	O-ring	–

◆ = Wearing part

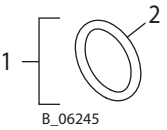

Inlet spare parts set

Pos	K	Stk	Designation	Order No.
1		1	Inlet spare parts set	2370212
2		1	Inlet distributor	–
3		4	Screw	–

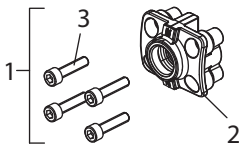

B_06246

Outlet spare parts set

Pos	K	Stk	Designation	Order No.
1		1	Outlet spare parts set	2370214
2		1	Outlet distributor	–
3		4	Screw	–

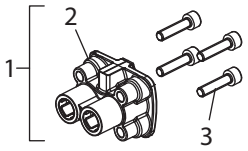

B_06247

Airbody spare parts set

Pos	K	Stk	Designation	Order No.
1		1	Airbody spare parts set	2370215
2		2	Air body preassembled	–

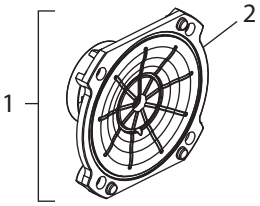

B_06248

Shaped packing spare parts set

Pos	K	Stk	Designation	Order No.
1		1	Shaped packing spare parts set	2370219
2		2	Shaped packing	–

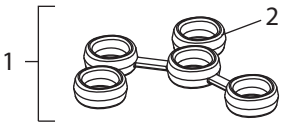

B_06249

Distributor spare parts set

Pos	K	Stk	Designation	Order No.
1		1	Distributor spare parts set	2370220
2		1	Distributor unit, complete	–
3		4	Screw	–

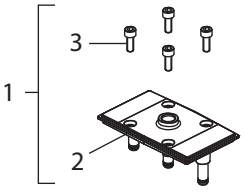

B_06250

Regulator unit spare parts set

Pos	K	Stk	Designation	Order No.
1		1	Regulator unit spare parts set	2370221
2		1	Regulator unit preassembled	–
3		4	Screw	–

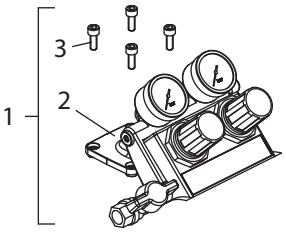

B_06251

Grounding spare parts set

Pos	K	Stk	Designation	Order No.
1		1	Grounding spare parts set	2370222
2		1	Cable lug	–
3		1	Screw for cable lug	–

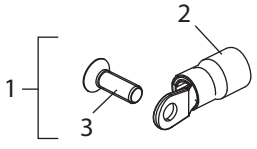

B_06253

15 GUARANTEE AND CONFORMITY DECLARATIONS

15.1 IMPORTANT NOTES REGARDING PRODUCT LIABILITY

As a result of an EC regulation effective from January 1, 1990, the manufacturer shall only be liable for his product if all parts originate from him or are approved by him, and if the devices are properly mounted, operated and maintained.
The manufacturer will not be held liable or will only be held partially liable if third-party accessories or spare parts have been used.
With genuine WAGNER accessories and spare parts, you have the guarantee that all safety regulations are complied with.

15.2 WARRANTY CLAIM

Full warranty is provided for this device:
We will at our discretion repair or replace free of charge all parts which within 36 months in single-shift, 18 months in double-shift or 9 months in triple-shift operation from date of receipt by the purchaser are found to be wholly or substantially unusable due to causes prior to the sale, in particular faulty design, defective materials or poor workmanship.
The type of warranty provided is such that the device or individual components of the device are either replaced or repaired as we see fit. The resulting costs, in particular shipping charges, road tolls, labour and material costs will be borne by us except where these costs are increased due to the subsequent shipment of the device to a location other than the address of the purchaser.
We do not provide warranty for damage that has been caused or contributed to for the following reasons:
Unsuitable or improper use, faulty assembly or commissioning by the purchaser or a third party, normal wear, negligent handling, defective maintenance, unsuitable coating products, substitute products and the influence of chemical, electrochemical or electrical agents, except when the damage is attributable to us.
Abrasive coating products such as red lead, emulsions, glazes, liquid abrasives, zinc dust paints and so forth reduce the service life of valves, packings, spray guns, nozzles, cylinders, pistons etc. Signs of wear traced back to these products are not covered by this warranty.
Components that have not been manufactured by WAGNER are subject to the original warranty of the manufacturer.
Replacement of a component does not extend the period of warranty of the device.
The device should be inspected immediately upon receipt. To avoid losing the warranty, we or the supplier company are to be informed in writing about obvious faults within 14 days upon receipt of the device.
We reserve the right to have the warranty compliance met by a contracting company.
The services provided by this warranty are dependent on evidence being provided in the form of an invoice or delivery note. If the examination discovers that no warranty claim exists, the costs of repairs are charged to the purchaser.
It is clearly stipulated that this warranty claim does not represent any constraint on statutory regulations or regulations agreed to contractually in our general terms and conditions.
Wagner International AG

15.3 CE DECLARATION OF CONFORMITY

We hereby declare that the supplied version of the diaphragm pump and its spray packs:

TOPFINISH DD10

complies with the following guidelines:

2006/42/EC
2014/34/EU

Applied standards, in particular:

EN ISO 12100: 2010	EN 1127-1: 2011
EN ISO 4413: 2010	EN 13463-1: 2009
EN ISO/IEC 80079-34: 2011	EN 13463-5: 2011
EN ISO 4414: 2010	EN 14462: 2015
EN 809: 1998+A1: 2009/AC: 2010	EN ISO 13732-1: 2008
EN 12621: 2006+A1: 2010	

Applied national technical standards and specifications, in particular:

DGUV regulation 100-500	TRBS 2153

Identification:

CE Ex II 2G c IIB T4

EC Certificate of Conformity
The CE certificate of conformity is enclosed with this product. If needed, further copies can be ordered through your WAGNER dealer by specifying the product name and serial number.

Order number: 2367686

WAGNER

DIN ISO 9001 WAGNER CERTIFIED

Order No. 2366672
Edition 09/2016

People's Republic of China
Wagner Spraytech (Shanghai) Co., Ltd
No 58, Jiangchang (W) Rd., 1st Floor
200436 Shanghai
Phone +86 / (0)21 6652 / 1858
Telefax +86 / (0)21 6630 / 8085
www.wagner-spraytech.com.cn

Germany
J. Wagner GmbH
Otto-Lilienthal-Str. 18
Postfach 1120
D- 88677 Markdorf
Phone +49/ (0)7544 / 5050
Telefax +49/ (0)7544 / 505200
E-mail service.standard@wagner-group.com

More contact addresses on the internet at:
www.wagner-group.com
Company/Locations/WAGNER worldwide

Subject to changes without notice

Document No. 11183212
Version B