WAGNER

Translation of the Original Operating Manual

ZIP52 - ZIP80

Version 12/2012

Pneumatic Double Diaphragm Pump ZIP52 - ZIP80

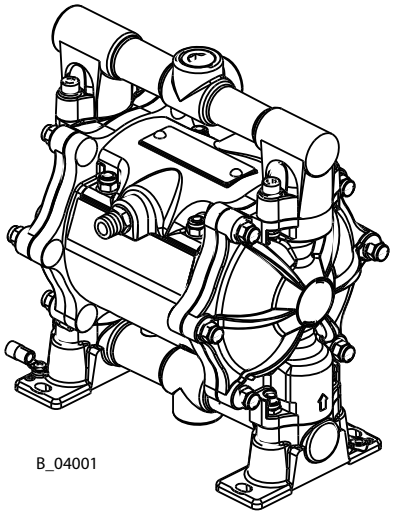

B_04001

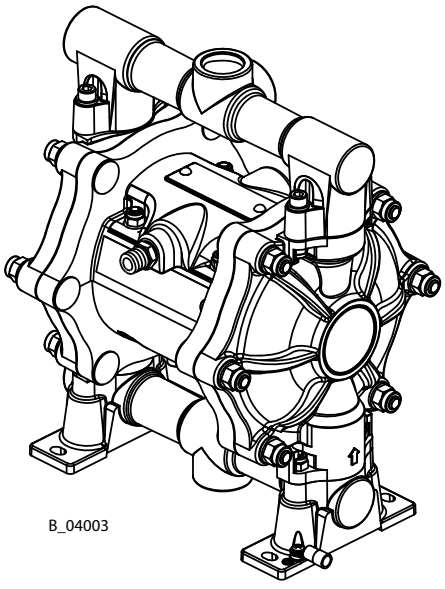

B_04003

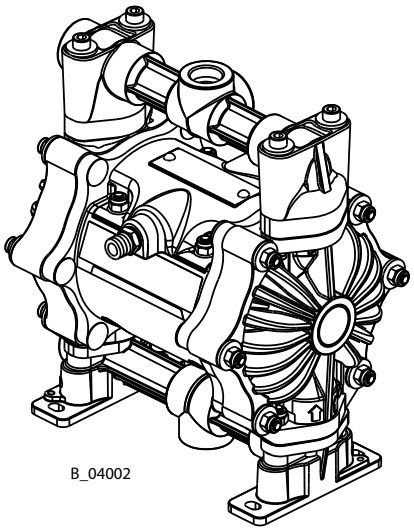

B_04002

Contents

1	**ABOUT THESE INSTRUCTIONS**	**5**
1.1	Preface	5
1.2	Warnings, Notes and Symbols in these Instructions	5
1.3	Languages	6
1.4	Abbeviations in the Text	6
2	**CORRECT USE**	**7**
2.1	Device Types	7
2.2	Type of Use	7
2.3	Use in Potentially Explosive Areas	7
2.4	Safety Parameters	8
2.6	Processing Materials	8
2.6	Reasonably Foreseeable Misuse	9
2.7	Residual Risks	9
3	**IDENTIFICATION**	**10**
3.1	Explosion Protection Identification	10
3.2	Maximum Surface Temperature	10
4	**GENERAL SAFETY INSTRUCTIONS**	**11**
4.1	Safety Instructions for the Operator	11
4.1.1	Electrical Equipment	11
4.1.2	Personnel Qualifications	11
4.1.3	Safe Work Environment	11
4.2	Safety Instructions for Staff	11
4.2.1	Safe Handling of WAGNER Spray Units	12
4.2.2	Grounding the Unit (Except for Non-Conductive Plastic Units)	12
4.2.3	Material Hoses	12
4.2.4	Cleaning	13
4.2.5	Handling Hazardous Liquids, Varnishes and Paints	13
4.2.6	Touching Hot Surfaces	13
4.2.7	Explosion Hazard	14
4.2.8	Noise Risk	14
4.2.9	Material Chemical Compatibility	14
4.2.10	Emergency Stop	14
4.2.11	Tightness Check	14
4.2.12	Maintenance	14
4.3	Use in Areas Subject to Explosion Hazards	15
4.3.1	Safety Regulations	15
4.3.2	Operation without Fluid	16
4.3.3	Maximum Surface Temperature	16
4.3.4	Maximum Surface Temperature - Exothermic Reactions	16
4.3.5	Connection Pipes	16
4.3.6	Pump Protection	16
5	**DESCRIPTION**	**17**
5.1	Areas of Application	17
5.2	Scope of Delivery	17

Contents

5.3	Data	17
5.3.1	Materials of the Fluid Transporting Parts	17
5.3.2	Technical Data	18
5.3.2.1	Technical Data for Metallic Pumps	18
5.3.2.2	Technical Data for Non-Metallic Pumps	20
5.3.3	Dimensions and Connections	22
5.3.4	Performance Diagrams	24
5.4	Mode of Operation	26
6	**ASSEMBLY AND COMMISSIONING**	**27**
6.1	Transportation	27
6.2	Storage	27
6.3	Assembly	27
6.4	Grounding (Except for Non-Conductive Plastic Units)	30
6.5	Commissioning	32
6.5.1	Safety Regulations	32
6.5.2	Preliminary Operations	33
6.5.3	Unit Pressure Tightness Test	34
7	**OPERATION**	**35**
7.1	Operation	35
7.2	Ending Work	35
7.3	Storage over Longer Periods of Time	35
8	**TROUBLE SHOOTING AND PROBLEM SOLVING**	**36**
9	**MAINTENANCE**	**38**
9.1	Safety Instructions	39
9.2	Diaphragm Replacement (Preventive Maintenance)	39
9.3	Diaphragm Replacement (Due to Breakage)	41
9.4	Cleaning / Replacement of the Suction and Delivery Ball Valves	41
9.5	Replacement of the Reversing Valve	42
9.6	Material Hoses	42
9.7	Decommisioning	42
10	**ACCESSORIES**	**43**
11	**SPARE PARTS**	**45**
11.1	How can Spare Parts be Ordered?	45
11.2	ZIP52 Pump - Metal - Universal Connections	46
11.3	ZIP52 Pump - Metal - Independent Connections	48
11.4	ZIP52 Pump - Conductive Acetal	50
11.45	ZIP52 Pump - Polypropylene - Universal Connections	52
11.6	ZIP80 Pump - Aluminum - Universal Connections	54
11.7	ZIP Motor	56
11.8	Service Sets	58
12	**GUARANTEE AND CONFORMITY DECLARATIONS**	**59**
12.1	Important Notes Regarding Product Liability	59
12.2	Guarantee Claim	59
12.3	CE Declaration of Conformity	60

1 ABOUT THESE INSTRUCTIONS

1.1 PREFACE

The operating manual contains information about safely operating, maintaining, cleaning and repairing the device.
The operating manual is part of the device and must be available to operating and service staff.
The operating and service staff should be instructed according to the safety instructions.
The device may only be operated in compliance with this operating manual.
This equipment can be dangerous if it is not operated according to the definitions in this operating manual.

1.2 WARNINGS, NOTES AND SYMBOLS IN THESE INSTRUCTIONS

Warning instructions in this operating manual highlight particular dangers to users and device and state measures for avoiding the hazard. These warning instructions fall into the following categories:

Danger - immediate risk of danger.
Non-observance will result in death or serious injury.

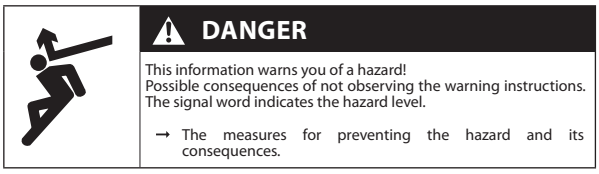

Warning - possible imminent danger.
Non-observance may result in death or serious injury.

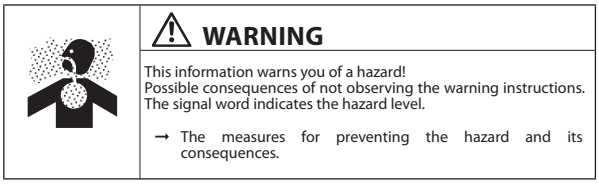

Caution - a possibly hazardous situation.
Non-observance may result in minor injury.

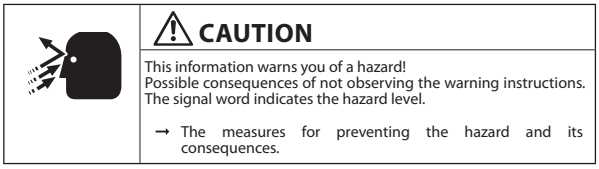

Notice - a possibly hazardous situation.
Non-observance can cause material damage.

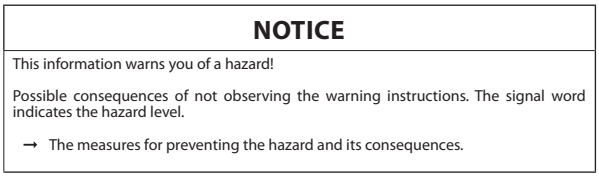

Note - provides information about particular characteristics and how to proceed.

1.3 LANGUAGES

The operating manual is available in the following languages:

Language:	Order No.	Language:	Order No.
German	2330425	English	2330426
Italian	2332230	French	2335553
Spanish	2335555		

1.4 ABBEVIATIONS IN THE TEXT

Stk	Number of pieces
Pos	Position
K	Marking in the spare parts lists
Order No.	Order number
DH	Double stroke

Materials:	
POM	Polyoxymethylen (Acetal)
Polypropylene	Polypropylene
PPS	Polypropylene sulfide
PTFE	Polytetrafluorethylene
UHMWPE	High molecular weight Polyethylene

2 CORRECT USE

2.1 DEVICE TYPES

A) Metallic versions (aluminum and stainless steel):
Pneumatic double diaphragm pumps with order number

ZIP52	ZIP52 PF	ZIP80
U550.ATRD7	U551.ATSS7	U555.ATSS7
U550.ATSS7	U551.303	
U550.ATSS8		
U550.STSS7		

B) Conductive Acetal versions:
Pneumatic double diaphragm pumps with order number

ZIP52	ZIP52 PF
U552.GHSS1	U553.GTSS1
U552.GHSS7	

C) Non-conductive polypropylene versions:
Pneumatic double diaphragm pumps with order number

ZIP52	ZIP52 PF
U552.PTSS7	U553.PHSD7
	U553.PTSS7

2.2 TYPE OF USE

A) Metallic versions (aluminum and stainless steel) and conductive Acetal:
The unit is suitable for working liquid materials like paints and varnishes in accordance with the classification into explosion classes IIA or IIB.

B) Non-conductive polypropylene versions:
The unit is suitable for working liquid materials like paints and varnishes.

2.3 USE IN POTENTIALLY EXPLOSIVE AREAS

A) Metallic versions (aluminum and stainless steel) and conductive Acetal:
The pneumatic double diaphragm pumps can be employed in explosion hazard zones (Zone 1).

B) Non-conductive polypropylene versions:
The pneumatic double diaphragm pump must be employed outside of explosion hazard zones.

2.4 SAFETY PARAMETERS

WAGNER accepts no liability for any damage arising from incorrect use.

- → Use the unit only to work with the materials recommended by WAGNER.
- → Operate only the entire unit.
- → Do not deactivate safety fixtures.
- → Use only WAGNER original spare parts and accessories.

The operation of the pneumatic double diaphragm pump may is only allowable under the following conditions:

- → The operating staff have previously been trained on the basis of this operating manual.
- → The safety regulations listed in this operating manual are observed.
- → The operating, maintenance and repair information in this operating manual is observed.
- → The statutory requirements and accident prevention regulations standard in the country of use are observed.

2.6 PROCESSING MATERIALS

- → Fluid materials like paints and varnishes.

NOTICE
Abrasive materials and pigments! Greater wear of the parts carrying the material. → Use the application-oriented model (flow rate/cycle, material, valve, etc.) as indicated in section 5.3.2. → Check if the fluids and solvents used are compatible with the pump construction materials as indicated in section 5.3.1.

2.6 REASONABLY FORESEEABLE MISUSE

The following is prohibited:
- → coating work pieces which are not grounded,
- → unauthorized conversions and modifications to the device,
- → processing dry or similar coating materials,
- → using defective components, spare parts or accessories other than those described in chapter 10 of this operating manual.

The forms of misuse listed below may result in health issues and/or damage to property:
- → use of powder as coating material
- → and incorrectly set values for the processing.

Wagner double diaphragm pumps are not designed for pumping food.

2.7 RESIDUAL RISKS

Residual risks are risks which cannot be excluded even in the event of correct use.
If necessary, warning and prohibition signs at the relevant points of risk indicate residual risks.

Residual risk	Source	Consequences	Specific measures	Lifecycle phase
Skin contact with paints and cleaning agents	Handling of paints and cleaning agents	Skin irritation, allergies	Wear protective clothing Observe safety data sheets	Operation, maintenance, disassembly
Paint in air outside the defined working area	Painting outside the defined working area	Inhalation of substances which are hazardous to health	Observe working and operating instructions.	Operation, maintenance

3 IDENTIFICATION

3.1 EXPLOSION PROTECTION IDENTIFICATION

A) Metallic versions (aluminum and stainless steel) and conductive Acetal:
Pneumatic double diaphragm pumps with order number

ZIP52	ZIP52 PF	ZIP80
U550.ATRD7	U551.ATSS7	U555.ATSS7
U550.ATSS7	U551.303	
U550.ATSS8	U553.GTSS1	
U550.STSS7		
U552.GHSS1		
U552.GHSS7		

As defined in the Directive 94/9/EC (ATEX 95), the unit is suitable for use in areas where there is an explosion hazard.

CE Ex II 2G IIB T4
+4°C Tamb +40°C

CE: European Communities
Ex: Symbol for explosion protection
II: Unit class II
2: Category 2 (Zone 1)
G: Ex-atmosphere gas
IIB: Explosion group
T4: Temperature class: maximum surface temperature < 135 °C; 275 °F
Tamb +4 °C to +40 °C: permissible ambient temperature area

3.2 MAXIMUM SURFACE TEMPERATURE

Maximum surface temperature:	the same as the permissible material temperature.
Permissible ambient temperature:	see under Technical data, Section 5.3.2.

4 GENERAL SAFETY INSTRUCTIONS

4.1 SAFETY INSTRUCTIONS FOR THE OPERATOR

→ Keep this operating manual at hand near the device at all times.
→ Always follow local regulations concerning occupational safety and accident prevention.

4.1.1 ELECTRICAL EQUIPMENT

Electrical devices and equipment
→ To be provided in accordance with the local safety requirements with regard to the operating mode and ambient influences.
→ May only be maintained by skilled electricians or under their supervision.
→ Must be operated in accordance with the safety regulations and electrotechnical regulations.
→ Must be repaired immediately in the event of problems.
→ Must be put out of operation if they pose a hazard.
→ Must be de-energized before work is commenced on active parts. Inform staff about planned work. Observe electrical safety regulations.

4.1.2 PERSONNEL QUALIFICATIONS

→ Ensure that the device is operated and repaired only by trained persons.

4.1.3 SAFE WORK ENVIRONMENT

→ Make sure that the floor in the area where you are working is electrostatically conductive in accordance with EN 61340-4-1.
→ Ensure that all persons within the working area wear electrostatically conductive shoes.
→ Ensure that during spraying, persons wear electrically conductive gloves. The grounding via the handle of the spray gun.
→ Paint mist extraction systems must be fitted on site according to local regulations.
→ Ensure that the following components of a safe working environment are available:
– material/air hoses adapted to the working pressure.
– Personal safety equipment (breathing and skin protection).
→ Ensure that there are no ignition sources such as naked flames, sparks, glowing wires or hot surfaces in the vicinity. Do not smoke.

4.2 SAFETY INSTRUCTIONS FOR STAFF

→ Always follow the information in these instructions, particularly the general safety instructions and the warning instructions.
→ Always follow local regulations concerning occupational safety and accident prevention.

4.2.1 SAFE HANDLING OF WAGNER SPRAY UNITS

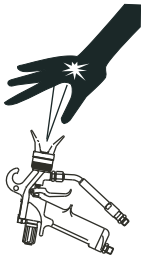

The spray jet is under pressure and can cause dangerous injuries.
Avoid injection of paint or cleaning agents:
→ Never point the spray gun at people.
→ Never reach into the spray jet.
→ Before all work on the device, in the event of work interruptions and functional faults:
- Switch off the energy/compressed air supply.
- Secure the spray gun against actuation.
- Relieve the pressure from the spray gun and unit.
- In case of functional faults: Identify and correct the problem, proceed as described in Chapter "Trouble Shooting".

→ The liquid emitters are to be checked for safe working conditions by an expert (e.g. Wagner Service Technician) as often as necessary or at least every 12 months, in accordance with the guidelines for liquid emitters (ZH 1/406 and BGR 500 Part 2 Chapter 2.36).
- For shut down devices, the examination can be suspended until the next start-up.

In the event of skin injuries caused by paint or cleaning agents:
→ Note down the paint or cleaning agent that you have been using.
→ Consult a doctor immediately.
Avoid danger of injury through recoil forces:
→ Ensure that you have a firm footing when operating the spray gun.
→ Only hold the spray gun briefly in a position.

4.2.2 GROUNDING THE UNIT (EXCEPT FOR NON-CONDUCTIVE PLASTIC UNITS)

Depending on the electrostatic charge and the flow speed of the spray, an electrostatic charge may occur in the equipment. In the event of discharge, this may result in the formation of sparks or flames.
→ Ensure that the unit is grounded for every spraying operation.
→ Ground the work pieces to be coated.
→ Ensure that all persons inside the working area are grounded, e.g. that they are wearing electrostatically conductive shoes.
→ Wear electrostatically conductive gloves when spraying. The grounding via the spray gun handle.

4.2.3 MATERIAL HOSES

→ Ensure that the hose material is chemically resistant to the sprayed materials.
→ Ensure that the material hose is suitable for the pressure generated in the unit.
→ Make sure that the hoses are laid only in suitable places. In no case, should hoses be laid in the following places:
– in high traffic areas,
– on sharp edges,
– on moving parts or
– on hot surfaces.
→ Make sure that the hoses are never used to pull or move the equipment.
→ The electrical resistance of the complete high pressure hose must be less than 1 MOhm.

Several liquids have a high expansion coefficient. In some cases its volume can rise with consequent damage to hoses, fittings and cause fluid leakage.
When the pump sucks liquid from a closed container, ensure that air or suitable gas can enter the container to avoid a vacuum being generated in the container itself. So that a negative pressure is avoided. The vacuum could implode the container (squeeze) and can break. The container would leak and the liquid flow out.
The pressure ratio is 1:1. Therefore the pressure generated by the pump is equal to the input air pressure.

4.2.4 CLEANING

- → De-energize the unit electrically.
- → Disconnect the pneumatic supply line.
- → Relieve the pressure from the unit.
- → Ensure that the flash point of the cleaning agent is at least 5 K above the ambient temperature.
- → To clean, use cloths and brushes moistened with solvent. Never use hard objects or spray on cleaning agents with a gun.

An explosive gas/air mixture forms in closed containers.
- → When cleaning units with solvents, never spray into a closed container.
- → Ground the container.

4.2.5 HANDLING HAZARDOUS LIQUIDS, VARNISHES AND PAINTS

- → When preparing or working with paint and when cleaning the unit, follow the working instructions of the manufacturer of the paints, solvents and cleaning agents being used.
- → Take the specified protective measures, in particular wear safety goggles, protective clothing and gloves, as well as hand protection cream if necessary.
- → Use a mask or a breathing apparatus if necessary.
- → For sufficient health and environmental safety: Operate the unit in a spray booth or on a spraying wall with the ventilation (extraction) switched on.
- → Wear suitable protective clothing when working with hot materials.

4.2.6 TOUCHING HOT SURFACES

- → Touch hot surfaces only if you are wearing protective gloves.
- → When operating the unit with a coating material with a temperature of > 43 °C; 109.4 °F:
  - Identify the unit with a warning sticker "Warning - hot surface".

Order No.	
9998910	Instruction sticker
9998911	Protection sticker

Note: The two stickers order together.

4.2.7 EXPLOSION HAZARD

Do not ever use chloride or halogenated solvents (such as trichlorothane and methylene chloride) with units containing aluminum or galvanized and zinc-plated parts. As they may react chemically thus producing an explosion danger.
Read the classification and information leaflet concerning the product and solvent to be used.

4.2.8 NOISE RISK

In some working conditions, the pump can be particularly noisy: for example when the air feeding pressure is high and when there is no pressure or a very low pressure in the pumped fluid (free flow operation). In these cases, all personnel working next to the pump shall wear adequate individual protections and/or use valves and seats in plastic material, provided the working conditions and the compatibility with the pumped fluid allow it.

4.2.9 MATERIAL CHEMICAL COMPATIBILITY

Make sure the materials employed in manufacturing the pump are chemically compatible with the fluid to be pumped. A wrong choice can cause harming people (as a result of prosection of noxious and irritant products) as well as polluting the environment, besides prematurely damaging the pump and its hoses.

4.2.10 EMERGENCY STOP

To quickly stop the unit in case of emergency, close the air cutoff valve or the pressure regulator; to interrupt the air supply to the pump's motor. Cutoff valve is not supplied with the pump. It has to be provided and properly installed by the user.
Caution: delivery circuits of pneumatic pumps can remain pressurized, even when the air input valve is closed.

4.2.11 TIGHTNESS CHECK

When using the pump after a long period of inactivity, check tightness of all parts subject to pressure.

4.2.12 MAINTENANCE

Depending on the type of use and the substances used, the user has to periodically check for presence of deposits as well as its cleanliness, the state of wear of the components and proper operation of the pump assembly.
The operation has to be carried out in conformity with what is written in this manual.

4.3 USE IN AREAS SUBJECT TO EXPLOSION HAZARDS

Only the pneumatic double diaphragm pump in metal (aluminum and stainless steel) and conductive Acetal can be used in explosion hazard zones. The following safety regulations must be observed and followed.

4.3.1 SAFETY REGULATIONS

Safe handling of WAGNER spray units
Mechanical sparks can form if the unit comes into contact with metal.
In an explosive atmosphere:
→ Do not knock or push the unit against steel or rusty iron.
→ Do not drop the unit.
→ Use only tools that are made of a permitted material.

Ignition temperature of the pumped material
→ Check that the ignition temperature of the pumped material is higher than the max. allowable surface temperature.

Medium supporting atomizing
→ To atomize the material, use only weakly oxidizing gases, e.g. air.

Surface spraying, electrostatic
→ Do not spray system parts with electrostatic.

Cleaning
If there are deposits on the surfaces, the unit may form electrostatic charges. Flames or sparks can form if there is a discharge.
→ Remove deposits from the surfaces to maintain conductivity.
→ Use only a damp cloth to clean the unit.

4.3.2 OPERATION WITHOUT FLUID

Avoid running the pump sucking air, without fluid inside. The air, combined with the vapour of flammable fluids, can generate internal areas with an explosion hazard.
Periodically check that the pump is working regularly, paying special attention to presence of air in the pumped fluid, which may be caused by a breakage in the pump.
Avoid operating the pump with damaged diaphragms.

4.3.3 MAXIMUM SURFACE TEMPERATURE

The maximum surface temperature of the pump depends on the temperature of the pumped fluid, that must not exceed the values indicated in the section "Technical Data".

4.3.4 MAXIMUM SURFACE TEMPERATURE - EXOTHERMIC REACTIONS

Fluids incompatible with the pump's materials or particularly reactive mixtures of products with several components may cause exothermic reactions and develop dangerous temperatures or pressure.

4.3.5 CONNECTION PIPES

Connection cables must be made of conductive material and properly grounded.

4.3.6 PUMP PROTECTION

If the pumping fluids contain solid particles, install a filter on the intake circuit. This prevents particles, that are large enough to damage the internal parts of the pump, from entering. Refer to the paragraph Technical Data to verify the maximum size of solids that can be pumped.
Keep the metal surfaces clean. Electric conductivity of the surfaces is essential for explosion protection.
Frequently clean the equipment so as to prevent residue of insulating substances from accumulating.
Do not use rusted parts or metal tools that may cause sparks of a mechanical origin inside the explosion hazard area.

5 DESCRIPTION

5.1 AREAS OF APPLICATION

NOTICE

Abrasive materials and pigments!
Greater wear of the parts carrying the material.

→ Use the application-oriented model (flow rate/cycle, material, valve, etc.) as indicated in section 5.3.2.
→ Check if the fluids and solvents used are compatible with the pump construction materials as indicated in section 5.3.1.

5.2 SCOPE OF DELIVERY

- Diaphragm pump

CE-Conformity	See Chapter 12
Operating manual German	Order No.: 2330425
Operating manual for other languages	See Chapter 1

The delivery note shows the exact scope of delivery.
Accessories: see Chapter 10

5.3 DATA

5.3.1 MATERIALS OF THE FLUID TRANSPORTING PARTS

Pump No.	Pump body	Diaphragm	Diaphragm disc	Valve seat	Valve ball	O-rings
U550.ATRD7	Aluminum	PTFE	PPS	PPS	Acetal (POM)	PTFE
U550.ATSS7	Aluminum	PTFE	PPS	Stainless steel	Stainless steel	PTFE
U550.ATSS8	Aluminum	PTFE	PPS	Stainless steel	Stainless steel	PTFE
U550.STSS7	Stainless steel	PTFE	PPS	Stainless steel	Stainless steel	PTFE
U551.ATSS7	Aluminum	PTFE	PPS	Stainless steel	Stainless steel	PTFE
U551.303	Aluminum	PTFE	PPS	Stainless steel	Stainless steel	PTFE
U552.GHSS1	Acetal (POM)	UHMWPE	POM	Stainless steel	Stainless steel	PTFE
U552.GHSS7	Acetal (POM)	UHMWPE	POM	Stainless steel	Stainless steel	PTFE
U552.PTSS7	Polypropylene	PTFE	Polypropylene	Stainless steel	Stainless steel	PTFE
U553.GTSS1	Acetal (POM)	PTFE	POM	Stainless steel	Stainless steel	PTFE
U553.PHSD7	Polypropylene	UHMWPE	Polypropylene	Stainless steel	Acetal (POM)	PTFE
U553.PTSS7	Polypropylene	PTFE	Polypropylene	Stainless steel	Stainless steel	PTFE
U555.ATSS7	Aluminum	PTFE	PPS	Stainless steel	Stainless steel	PTFE

Positions of the individual parts: see spare parts list.

5.3.2 TECHNICAL DATA

5.3.2.1 TECHNICAL DATA FOR METALLIC PUMPS

Description		Unit	ZIP52	ZIP52	ZIP52 PF	ZIP80
Wetted parts materials			Aluminum	Stainless steel	Aluminum	Aluminum
Transmission ratio			1:1	1:1	1:1	1:1
Flow volume per double stroke (DH)		cm^3 cc	108	108	62	225
Maximum operating pressure		MPa bar psi	0.8 8 116	0.8 8 116	0.8 8 116	0.8 8 116
Maximum possible speed		DH/min	490	490	490	360
Maximum flow rate (free flow - flooded inlet)	(1)	l/min GPM	52 13.7	52 13.7	28 7.4	80 21.1
Minimum air inlet pressure		MPa bar psi	0.15 1.5 22	0.15 1.5 22	0.10 1.0 15	0.22 2.2 32
Maximum air inlet pressure		MPa bar psi	0.8 8 116	0.8 8 116	0.8 8 116	0.8 8 116
Air inlet connection (male)		BSP(R)	1/4"			
Maximum suction height	(2)	m ft	4.8 15.7	4.8 15.7	2.8 9.2	4.9 16
	(3)	m ft	2.7 9	2.7 9	2.2 7.2	2.7 9
Maximum solid body size		mm inches	2.0 0.08	2.0 0.08	2.0 0.08	3.0 0.12
Sound pressure equivalent 50 cycles/min (feeding 5 bar)	(4)	dB(A)	73	73	73	79
Sound pressure equivalent maximum flow rate (feeding 8 bar)	(4)	dB(A)	85	85	85	91
Sound power at maximum flow rate (feeding 8 bar)	(5)	dB(A)	99	99	99	102
Fluid connections (inlet & outlet bush)		BSP(G)	1/2"	1/2"	1/2"	3/4"
Weight		kg lb	3.7 8.1	6.0 13.2	3.7 8.1	5.3 11.7
Maximum material pressure at the pump's inlet		MPa bar psi	0.1 1 14.5			

Description		Unit	ZIP52	ZIP52	ZIP52 PF	ZIP80
Wetted parts materials			Aluminum	Stainless steel	Aluminum	Aluminum
Material temperature		°C °F	+4÷90 +39÷194	+4÷90 +39÷194	+4÷90 +39÷194	+4÷90 +39÷194
Ambient temperature		°C °F	+4 ÷ +40 +39 ÷ +104			
Allowable sloping position for operation		<) °	10°			

(1) PF = Perfect Flow = low pulsation pump with a shorter stroke
(2) Pump with stainless steel valves (start condition: empty pump / dry valves)
(3) Pump with plastic valves (start condition: empty pump / dry valves)
(4) LqA (10s)
(5) (ISO 3744

⚠ WARNING

Outgoing air containing oil!
Risk of poisoning if inhaled.
Air motor switching problems.

→ Provide compressed air free from oil and water (quality standard 5.5.4 according to ISO 8573.1)
5.5.4 = 40 µm / +7 / 5 mg/m³.

5.3.2.2 TECHNICAL DATA FOR NON-METALLIC PUMPS

Description		Unit	ZIP52	ZIP52 PF	ZIP52	ZIP52 PF
Wetted parts materials			Polypropylene	Polypropylene	Conductive Acetal	Conductive Acetal
Transmission ratio			1:1	1:1	1:1	1:1
Flow volume per double stroke (DH)		cm^3 cc	108	62	108	62
Maximum operating pressure		MPa bar psi	0.8 8 116	0.8 8 116	0.8 8 116	0.8 8 116
Maximum possible speed		DH/min	490	490	490	490
Maximum flow rate (free flow - flooded inlet)	(1)	l/min GPM	52 13.7	28 7.4	52 13.7	28 7.4
Minimum air inlet pressure		MPa bar psi	0.15 1.5 22	0.10 1.0 15	0.15 1.5 22	0.10 1.0 15
Maximum air inlet pressure		MPa bar psi	0.8 8 116	0.8 8 116	0.8 8 116	0.8 8 116
Air inlet connection (male)		BSP(R)	1/4"			
Maximum suction height	(2)	m ft	4.8 15.7	2.8 9.2	4.8 15.7	2.8 9.2
	(3)	m ft	2.7 9	2.2 7.2	2.7 9	2.2 7.2
Maximum solid body size		mm inches	2.0 0.08	2.0 0.08	2.0 0.08	2.0 0.08
Sound pressure equivalent 50 cycles/min (feeding 5 bar)	(4)	dB(A)	73	73	73	73
Sound pressure equivalent maximum flow rate (feeding 8 bar)	(4)	dB(A)	85	85	85	85
Sound power at maximum flow rate (feeding 8 bar)	(5)	dB(A)	99	99	99	99
Fluid connections (inlet & outlet bush)		BSP(G)	1/2"	1/2"	1/2"	1/2"
Weight		kg lb	3.2 7.1	3.2 7.1	3.2 7.1	3.2 7.1

Description		Unit	ZIP52	ZIP52 PF	ZIP52	ZIP52 PF
Wetted parts materials			Polypropylene	Polypropylene	Conductive Acetal	Conductive Acetal
Maximum material pressure at the pump's inlet		MPa bar psi	0.1 1 14.5			
Material temperature		°C °F	+4÷60 +39÷140	+4÷60 +39÷140	+4÷80 +39÷176	+4÷80 +39÷176
Ambient temperature		°C °F	+4 ÷ +40 +39 ÷ +104			
Allowable sloping position for operation		<) °	10°			

(1) PF = Perfect Flow = low pulsation pump with a shorter stroke
(2) Pump with stainless steel valves (start condition: empty pump / dry valves)
(3) Pump with plastic valves (start condition: empty pump / dry valves)
(4) LqA (10s)
(5) ISO 3744

⚠ WARNING

Outgoing air containing oil!
Risk of poisoning if inhaled.
Air motor switching problems.

→ Provide compressed air free from oil and water (quality standard 5.5.4 according to ISO 8573.1)
5.5.4 = 40 µm / +7 / 5 mg/m³.

5.3.3 DIMENSIONS AND CONNECTIONS

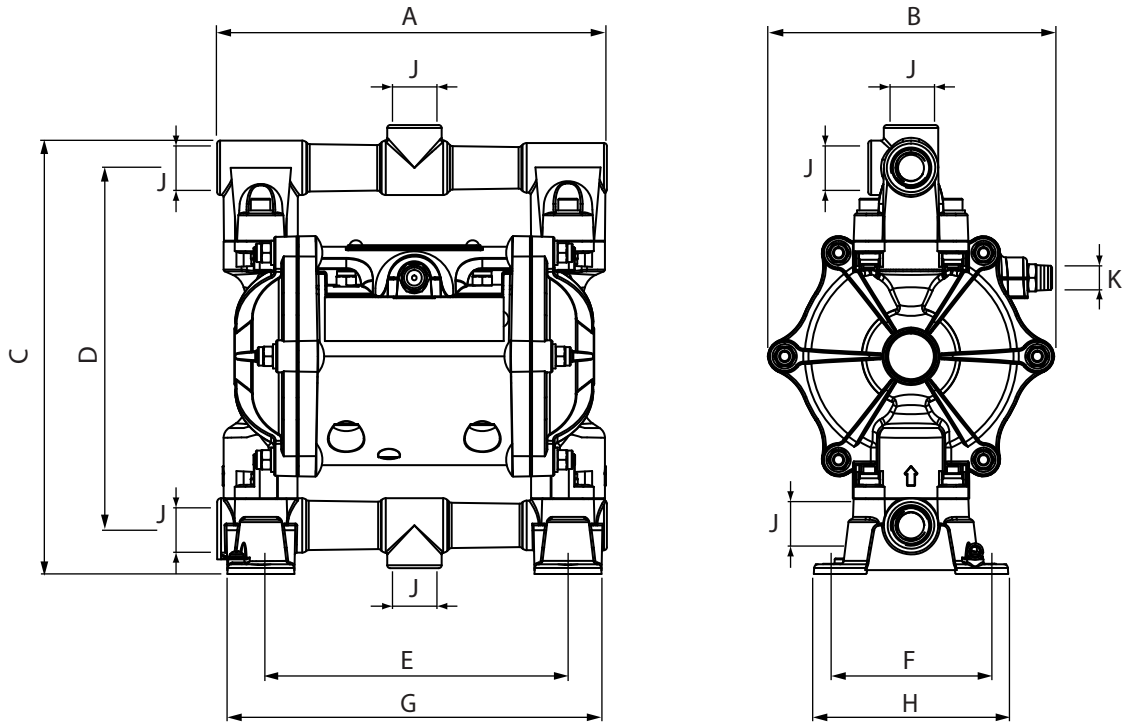

B_04007

Wall mount

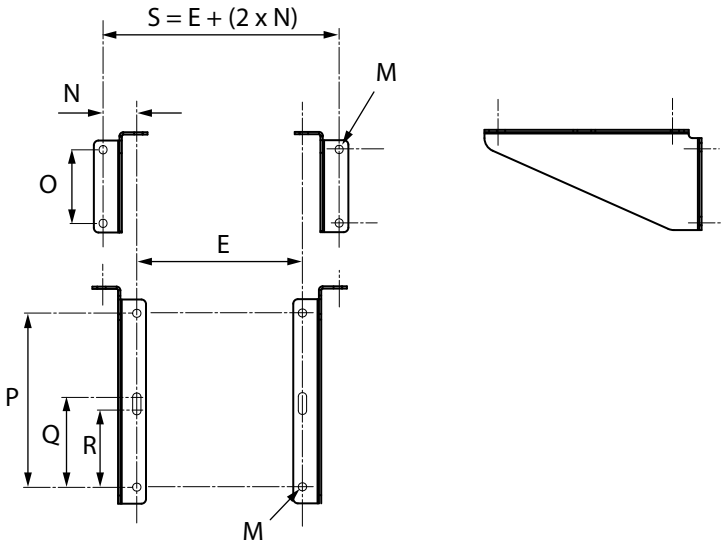

B_04028

	ZIP52 Aluminum mm; inch	ZIP52 Stainless steel mm; inch	ZIP52 Polypropylene and conductive Acetal mm; inch	ZIP52 PF Aluminum mm; inch	ZIP52 PF Polypropylene and conductive Acetal mm; inch	ZIP80 Aluminum mm; inch
A	200.5; 7.89	210.0; 8.27	205.0; 8.07	200.5; 7.89	205.0; 8.07	220.0; 8.66
B	147.5; 5.80	147.5; 5.80	149.0; 5.86	147.5; 5.80	149.0; 5.86	174.5; 6.87
C	231.0; 9.09	232.5; 9.15	236.0; 9.29	231.0; 9.09	236.0; 9.29	277.5; 10.92
D	184.0; 7.24	184.0; 7.24	191.0; 7.52	184.0; 7.24	191.0; 7.52	220.5; 8.68
E	155.0 - 161.0; 6.10 - 6.34	157.5 - 163; 6.20 - 6.42	154.0 - 162.0 6.06 - 6.38	155.0 -161.0; 6.10 - 6.34	154.0 - 162.0 ; 6.06 - 6.38	168.0 - 174.0; 6.61 - 6.85
F	86.0; 3.38	86.0; 3.38	87.0; 3.42	86.0; 3.38	87.0; 3.42	95.0; 3.74
G	192.5; 7.58	188; 7.40	187.0; 7.36	192.5; 7.58	187.0; 7.36	205.5; 8.09
H	100.0; 3.94	100.0; 3.94	101.0; 3.97	100.0; 3.94	101.0; 3.97	110.0; 4.33
J	G1/2" (BPS) F					G3/4" (BPS) F
K	R1/4" (BSPT) M					
M	ø9.0; ø0.35					
N	37.5; 1.48					
O	80.0; 3.15					
P	189; 7.4					
Q	98; 3.85					
R	83; 3.27					

5.3.4 PERFORMANCE DIAGRAMS

Example

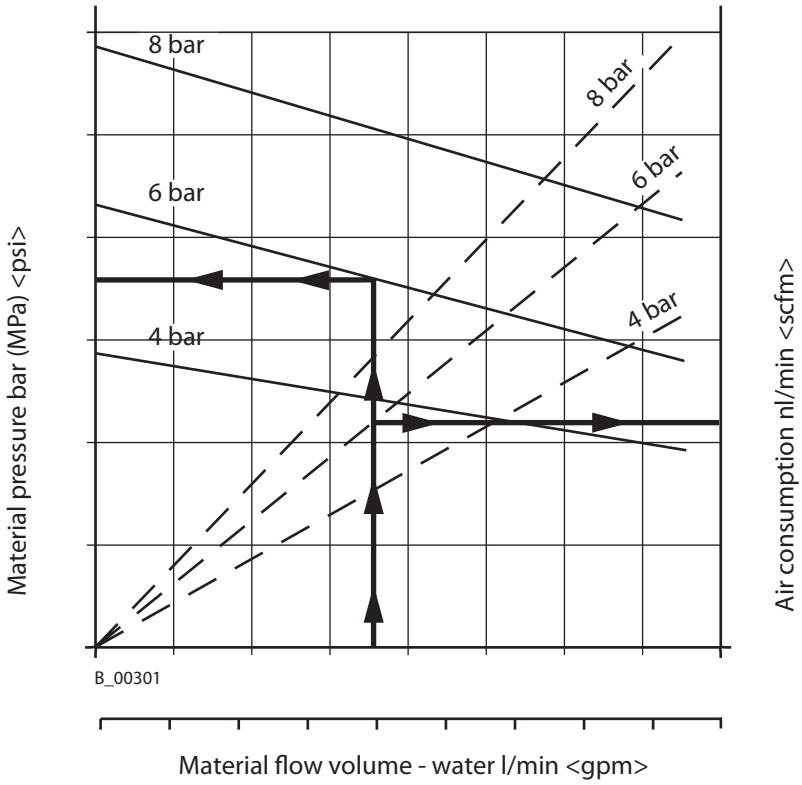

Diagram ZIP52

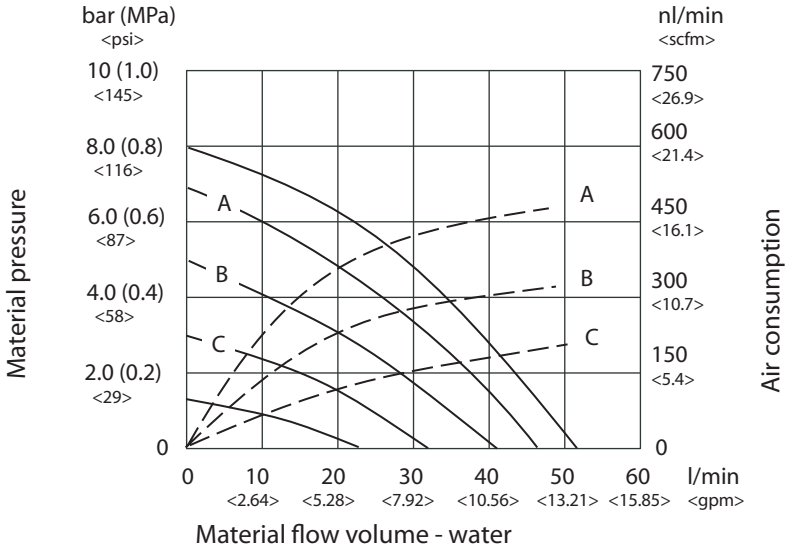

A = 8 bar; 0.8 MPa; 116 psi air pressure
B = 6 bar; 0.6 MPa; 87 psi air pressure
C = 4 bar; 0.4 MPa; 58 psi air pressure

The chart above refers to the aluminium version with stainless steel valves.

Diagram ZIP52 PF

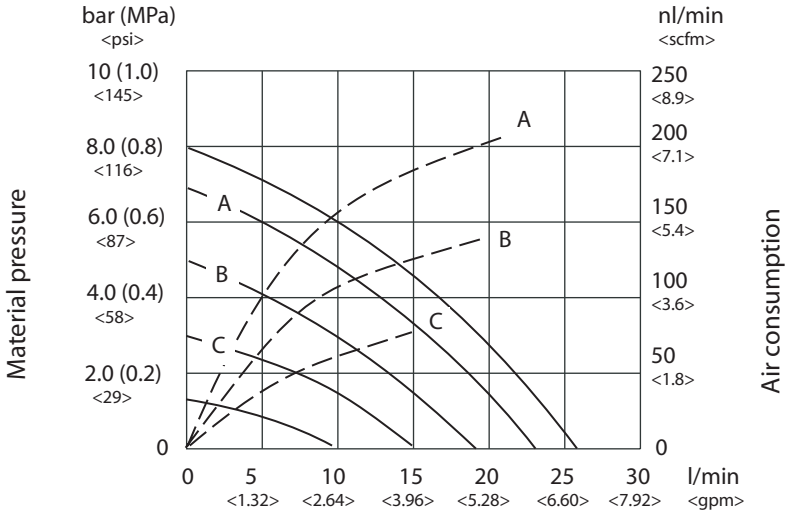

Material flow volume - water

A = 8 bar; 0.8 MPa; 116 psi air pressure
B = 6 bar; 0.6 MPa; 87 psi air pressure
C = 4 bar; 0.4 MPa; 58 psi air pressure

The chart above refers to the aluminium version with stainless steel valves.

Diagram ZIP80

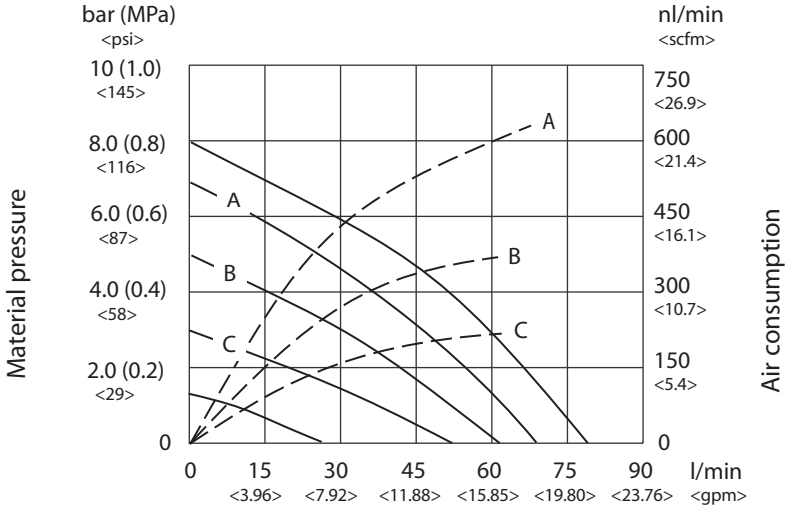

Material flow volume - water

A = 8 bar; 0.8 MPa; 116 psi air pressure
B = 6 bar; 0.6 MPa; 87 psi air pressure
C = 4 bar; 0.4 MPa; 58 psi air pressure

The chart above refers to the aluminium version with stainless steel valves.

5.4 MODE OF OPERATION

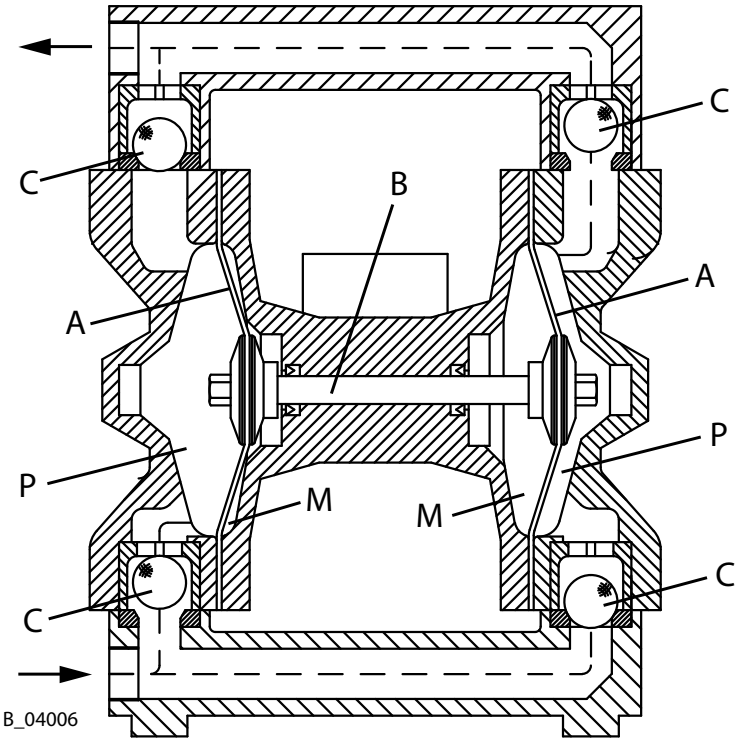

Double diaphragm pump - operating principle
The double diaphragm pump is driven with compressed air.
Two diaphragms (A) are mechanically connected to each other by means of a shaft (B).
Each diaphragm generates two chambers: pumping chamber (P) and motor chamber (M).
A pneumatic distributor alternately supplies compressed air into one of the driving chambers (M), thus producing the diaphragms movement and consequently causing one of the pumping chambers (P) to empty (as a result of volume decrease), while at the same time the other chamber (P) sucks the fluid in (as a result of volume increase). A series of four check valves (C) prevents the liquid from flowing back, thus producing the suction and delivery phases in each pumping chamber, and generating the pumping effect.
The ZIP models are equipped with an internal safety valve that opens when the maximum allowed value of air pressure supply is exceeded.

⚠ WARNING

Overpressure!
Risk of injury from bursting components.

→ Never change the safety valve setting.

6 ASSEMBLY AND COMMISSIONING

6.1 TRANSPORTATION

The pump may be moved manually, without lifts and cranes.

6.2 STORAGE

Store the pump in a closed and dry environment.
Thoroughly clean the pump, if a long-term decommissioning is planned.
When resuming pump operation, proceed as described in the following sections.

⚠ WARNING

Discharge of electrostatically charged components in atmospheres containing solvents!
Explosion hazard from electrostatic sparks.

→ Clean the pump only with a damp cloth.

6.3 ASSEMBLY

Install the pump on a flat and horizontal foundation and screw it on tightly.
Ensure that all fixing screws (diaphragm covers, manifold, covers) are correctly tightened.
Tighten the fixing screws regularly depending on pump use. In the case of continuous or prolonged operation, it is advisable to check at least once a week that there are no air and/or liquid leaks.

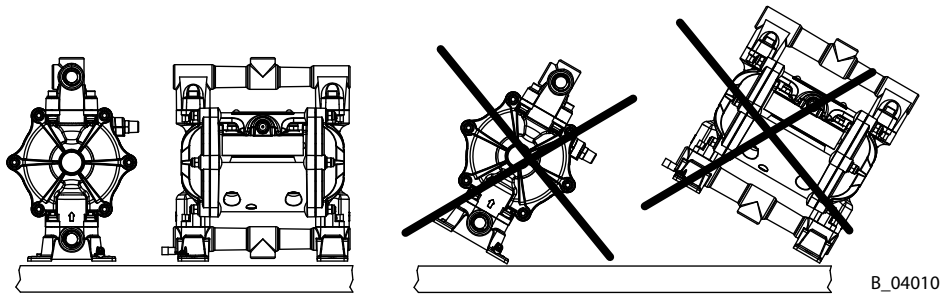

⚠ WARNING

Oblique flooring!
Risk of accidents if the unit rolls away/falls.

→ Place the frame with the pump horizontally.
→ Secure frame.

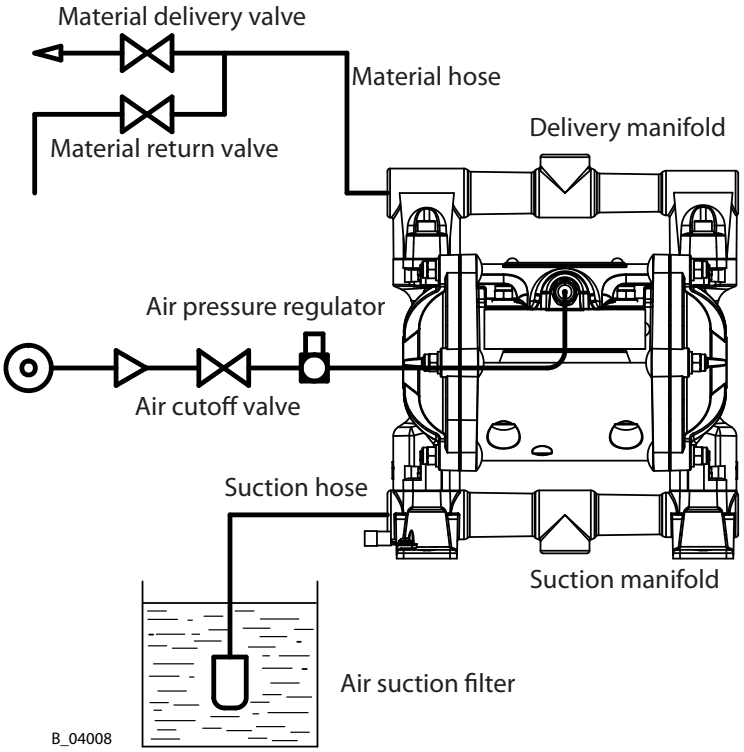

Material connection:
On the suction manifold of the pump (bottom) connect the suction hose. On the delivery manifold (top) connect the material hose. Use flexible hoses to absorb the pump's vibrations. Ensure that the hoses are not mechanically stressing the pump. Never connect the pump with rigid pipes.
For pumps installed in areas subject to explosion hazards, all hoses and pipes must be made of conductive material and must be grounded.
Install a suction filter on the suction hose. This prevents particles, that are large enough to damage the internal parts of the pump, from entering. Refer to the paragraph Technical Data to verify the maximum size of solids that can be pumped.

All hoses and components connected to the supply line must be able to operate at the pump's maximum pressure with the pump working at a pulsating pressure.
All items connected to the suction manifold must not get crushed as a result of the depression produced by the pump.
The suction and delivery hoses and pipes must have a cross-section proportionate to the flow rate and the viscosity of the pumped fluid. Avoid long and winding pipes, especially in the suction.

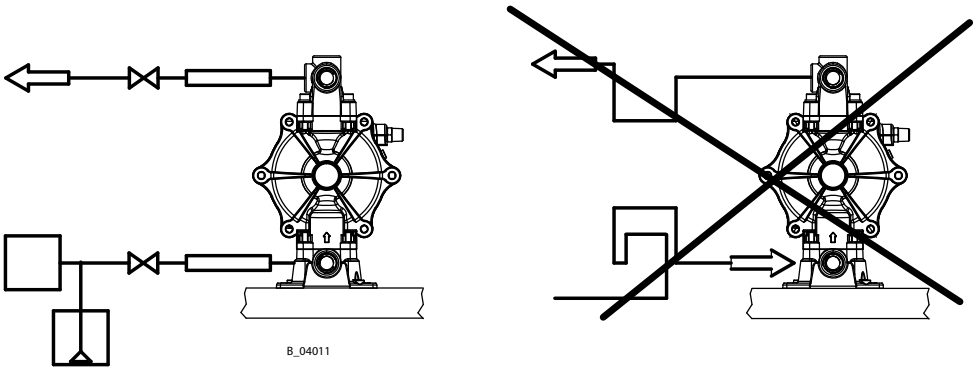

Air inlet connection:
The driving air pipe must be properly dimensioned.
Connect the compressed air supply to the pump to the pressure distribution network.
The connection must be carried out on the fitting on the pump. Do not replace the original connection.
Use a pipe with a suitable diameter for the connection.
Always install an air cutoff valve and an air processing unit (filter/regulator unit).
The pressure must not exceed the maximum value indicated on the plate.

Air pressure quality:
The pneumatic motor must be supplied with clean and dry industrial air. Make sure efficient filter and condensation separation systems are installed on the air line.
The pump can run with non-lubricated air.
Air pressure quality: 5.5.4 = 40 µm / +7 / 5 mg/m^3

Reversing valve:
The reversing valve of the pump is lubricated at the factory and does not need any lubrication.

Safety valve:
The ZIP models are equipped with an internal safety valve that opens when the maximum allowed value of air pressure supply is exceeded.

Back-pressure valve:
If the pump has been installed on a higher level than the liquid to be pumped, it is recommended that a back-pressure valve be provided at the lower end of the suction pipe.

6.4 GROUNDING (EXCEPT FOR NON-CONDUCTIVE PLASTIC UNITS)

⚠ WARNING

Discharge of electrostatically charged components in atmospheres containing solvents!
Explosion hazard from electrostatic sparks.

→ Clean the pump only with a damp cloth.

⚠ WARNING

Heavy paint mist if grounding is insufficient!
Danger of poisoning.
Insufficient paint application quality.

→ Ground all device components.
→ Ground the work pieces to be coated.

Grounding schema (example)

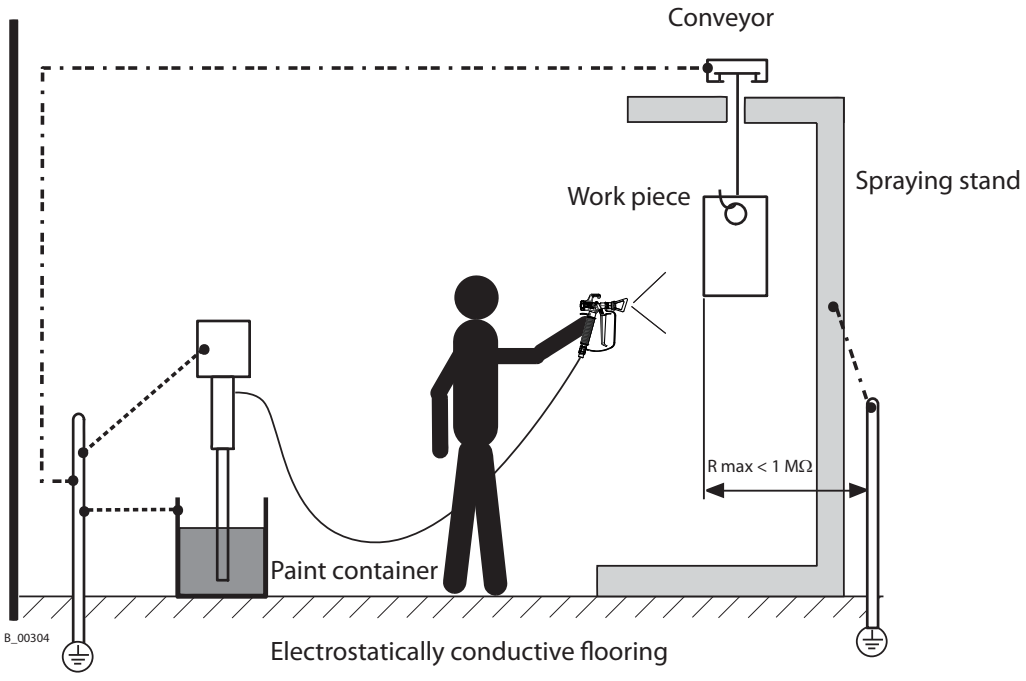

The ground connection is at the pumps of metal and conductive acetal imperative.
Note: Pump of nonconductive plastic have no ground connection.

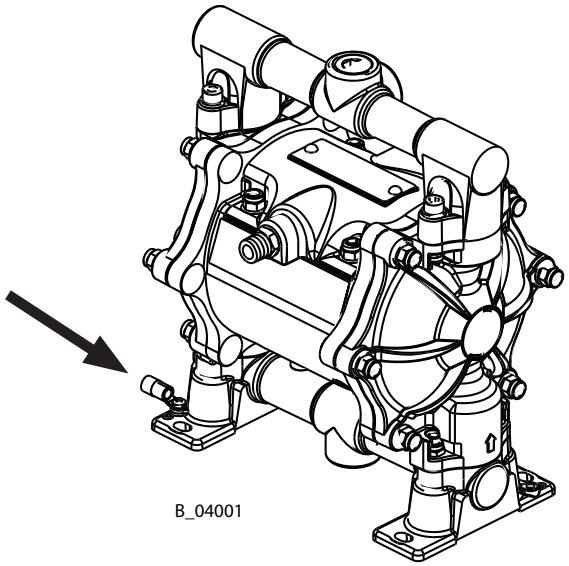

Procedure:

1. Remove the crimp connection delivered with the pump.
2. Crimp the grounding cable on the terminal and screw it back onto the pump's foot.
3. Ground the material/paint container to a local ground connection.
4. Ground the other parts of the system to a local ground connection.

6.5 COMMISSIONING

6.5.1 SAFETY REGULATIONS

Every time before starting up the following points should be observed as laid down in the operating instructions:

- Observe all safety regulations in accordance with chapter 4.
- Carry out commissioning properly.

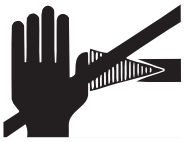

⚠ WARNING

High pressure spray jet!
Danger to life from injecting paint or solvent.

→ Never reach into the spray jet.
→ Never point the spray gun at people.
→ Consult a doctor immediately in the event of skin injuries caused by paint or solvent. Inform the doctor about the paint or solvent used.
→ Never seal defective high pressure parts, instead relieve the pressure from them and replace them.

⚠ WARNING

Toxic and/or flammable vapor mixtures!
Risk of poisoning and burns.

→ Operate the unit in a spray booth approved for the working materials.
-or-
→ Operate the unit on an appropriate spraying wall with the ventilation (extraction) switched on.
→ Observe national and local regulations for the outgoing air speed.

⚠ WARNING

Gas mixtures can explode if there is an incompletely filled pump!
Danger to life from flying parts.

→ Ensure that the pump and suction system are always completely filled with cleaning agent or working medium.
→ Do not spray the unit empty after cleaning.

Emergency stop
In the case of unforeseen occurrences close the air cut-off valve immediately and open the return valve (if installed) and/or delivery devices (valves or guns).

6.5.2 PRELIMINARY OPERATIONS

Preliminary flushing

The pump was tested with oil or other fluids, depending on the model.
Before use, it is necessary to wash the pump once using an adequate solvent.
Ensure that:

- The pressure regulator knob is turned fully counterclockwise (0 bar pressure).
- The air cutoff valve is closed.
- The material delivery valve and the return valve, if installed, are opened.

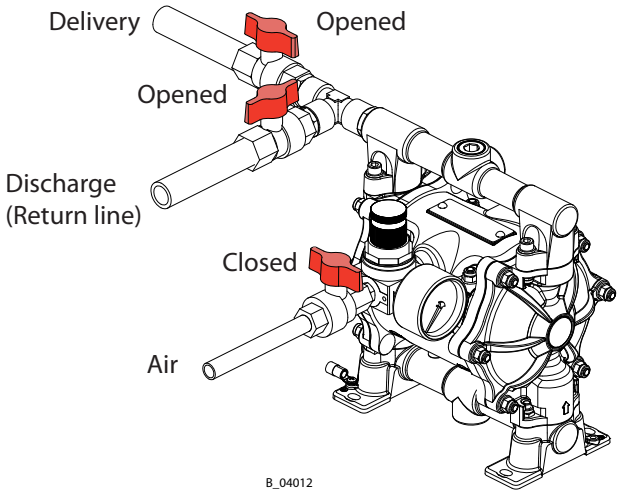

Open the air cutoff valve and turn the regulator knob clockwise until the pump starts.

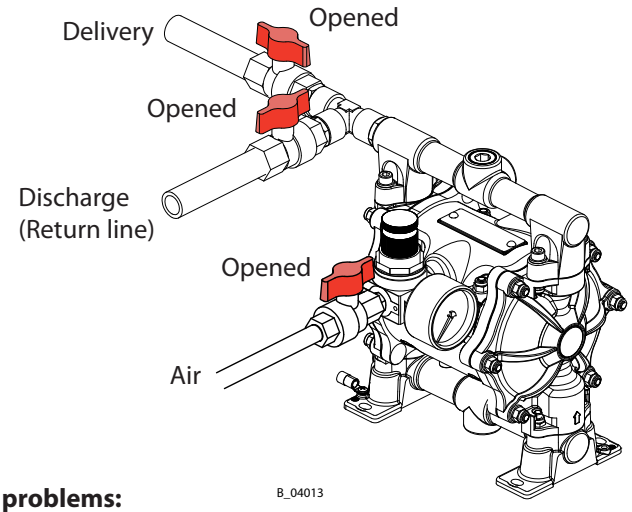

Start-up problems:

If the pump doesn't start up, carry out the following steps:

→ Close the air cutoff valve.
→ Turn the regulator knob of the air pressure regulator off counterclockwise (0 bar pressure).
→ Open the air cutoff valve for air.
→ Turn the regulator knob clockwise until the pump starts.

If necessary, repeat the operation several times.
While the pump is priming, don't exceed with the speed.

Close the return valve, if installed.

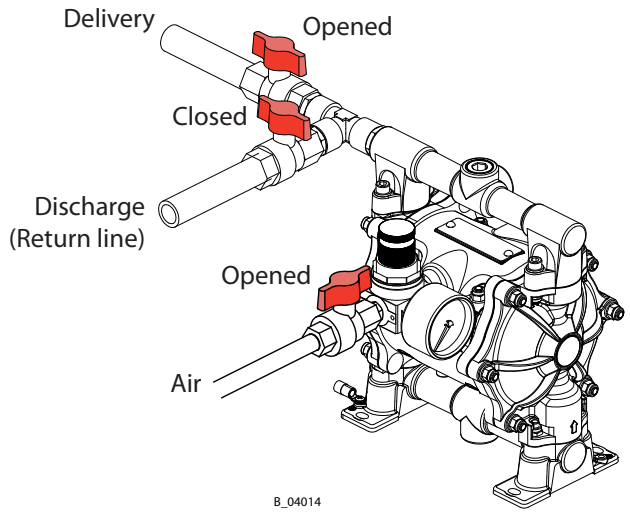

Let the solvent flow through the pump for 2 or 3 minutes.

6.5.3 UNIT PRESSURE TIGHTNESS TEST

Close the material delivery valve, once the pump is primed.
Gradually increase the pressure until reaching the maximum allowed value for the pump and the devices connected to it. Ensure that the fittings do not leak.

7 OPERATION

7.1 OPERATION

Suction:
Make sure that the air pressure regulator knob is turned fully counterclockwise (0 bar pressure).
Open the compressed air and material delivery valve, then increase the air pressure until the pump starts. While the pump is priming, don't exceed with the speed.

Return valve:
To facilitate the priming of the pump, open the return valve, if installed.
The return valve is strongly recommended in case of viscous materials or long pipes. Close the return valve when the suction is finish.

Material delivery:
The pump supplies the material while the material delivery valve is open.
Change the air pressure with the air pressure regulator, in order to achieve the desired amount respectively pressure of material.

Drawn in air:
In case air accidentally flows into the pump suction inlet, it is necessary to immediately reduce the compressed air pressure to avoid the pump working at an excessive speed.

Stopping the pump:
To stop the pump, simply close the material delivery valve or any other device installed (such as dispensing valves or guns) on the delivery line.

7.2 ENDING WORK

At the end of the Work close the air cutoff valve. Relieve the pressure in the material line, by opening the return valve (if installed) or the dispensing device (valve or spray gun).

Dealing with hardening liquids:
In case of hardening liquids such as 2-component mixed resins, the pump, and anything connected to it, must be thoroughly flushed out at the end of working session with using a solvent suitable for the type of resin being used. The solvent must be left inside the pump, until its next use.

7.3 STORAGE OVER LONGER PERIODS OF TIME

When storing the device for longer periods of time it is necessary to thoroughly clean it and protect it from corrosion. Use a suitable preserving fluid, according to the material of the wetted parts of the pump.

8 TROUBLE SHOOTING AND PROBLEM SOLVING

Problem	Cause	Remedy
The pump does not work.	The air motor does not work or stops.	Close the air cutoff valve, increase the pressure and open the air cutoff valve immediately.
	No pressure indication (pressure regulator defective).	Disconnect compressed air supply briefly or repair or replace the pressure regulator.
	The delivery line is clogged.	Check the delivery line.
	Insufficient supply of compressed air.	Check the compressed air supply.
	The filter in delivery line is clogged (if installed).	Clean or replace the filter.
The unit is working (i.e.: the pump is moving), but no fluid is delivered.	The suction filter is clogged (if installed).	Carefully clean the filter.
	No fluid is available at the pump's inlet.	Check the fluid level in the tank or container.
	The suction pipe is clogged or leaking (possibility of sucking air in from the atmosphere).	Check the suction pipe. Replace it if necessary.
The material flow is suspended.	The suction pipe is partially clogged.	Check the suction pipe. Replace it if necessary.
	Cavitation (air bubbles in the liquid).	Check the suction in the tank. Exclude air intake due to high viscosity.
	The material check valve doesn't completely close.	Check for impurities on the valve seats. Replace the check valves if necessary.
The pump supply decreases during work.	Partial clogging of the delivery line.	Check the delivery line.
	Deviations of the material characteristics (like viscosity).	Check the material characteristics.
	Ice formation inside the air outlet pipes.	Check the compressed air quality. Install a condensation separator on the air line. Install an air dryer if necessary. Fill one lubricant with special de-icing fluid.
The pump supply decreases during work, and tends to stop completely.	The delivery manifold valves guides are worn-out.	Replace the delivery manifold (or in the case of plastic pumps, replace the insert).

Problem	Cause	Remedy
The material delivery valve is closed, nevertheless the pump continues to run even if the supply's air cutoff vale is closed.	The material delivery valve or the delivery manifold leaks.	Check the material delivery valve and the seals of the delivery manifold.
	Dirty or worn-out material check valves in the delivery and suction manifold.	Clean the check valves and replace them if they are worn.

If the problem is not listed above consult your WAGNER Service Center.

9 MAINTENANCE

⚠ WARNING

Incorrect maintenance/repair!
Danger to life and equipment damage.

→ Only a WAGNER service center or a suitably trained person may carry out repairs and replace parts.
→ Only repair and replace parts that are listed in the chapter "Spare Parts Catalogue" and that are assigned to the unit.
→ Before all work on the unit and in the event of work interruptions:
- Disconnect the control unit from the mains.
- Relieve the pressure from the spray gun and unit.
- Secure the spray gun against actuation.
→ Observe the operating and service instructions when carrying out all work.

1. Check and clean the delivery and suction filters daily or as necessary.
2. Carry out every shut down as explained in paragraph 7.2.
3. As necessary, check and replace hoses, pipes, and connections daily.

→ In accordance with the guideline for liquid emitters (ZH 1/406 and BGR 500 Part 2 Chapter 2.3):
- The liquid emitters should be checked by an expert (e.g. Wagner service technician) for their safe working conditions as required and at least every 12 months.
- For shut down devices, the examination can be suspended until the next start-up.

9.1 SAFETY INSTRUCTIONS

Prior to maintenance and cleaning measures note:

- → Wear protective clothing and use specific protection devices with regard to the nature of the fluids involved.
- → Close the compressed air supply and release the pressure from the pump and pipes connected to it.
- → Depending on the operation, disconnect the material and air side connection pipes.
- → Remove the pump from the base or support it is fastened to. Turn the pump upside-down over a container suitable for collecting any liquid it may contain.
- → After the pump has been reassembled and reinstalled following maintenance operations:
  check the efficiency of the grounding connection of the individual parts of the pump.
  Carry out pressure retention test in accordance with chapter 6.5.3. Check that no air flows out.

Note: All threads are right-hand threads.

9.2 DIAPHRAGM REPLACEMENT (PREVENTIVE MAINTENANCE)

Mark the coupled parts (Diaphragm covers, distributor, covers) with a felt-tip pen so as to make subsequent reassembly easier.

a) Remove the suction and delivery manifolds.

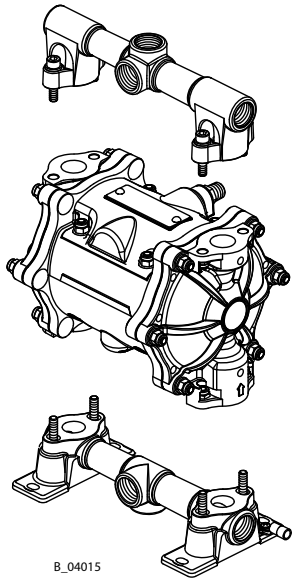
B_04015

b) Disassemble the fastening nuts and remove the outer diaphragm covers. Disassemble the pressure side cover (1).

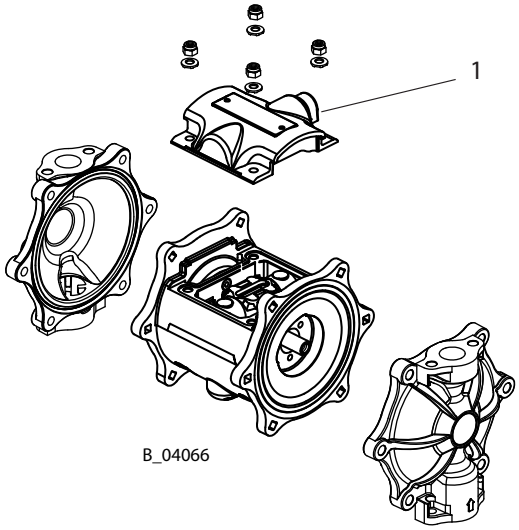

B_04066

c) Hald the end nut of an outer diphragm disk with a wrench. Loose the end nut of the other diaphragm disk and remove.
d) Remove the freed diaphragm with its corresponding internal disc, and remove the shaft from the motor block.

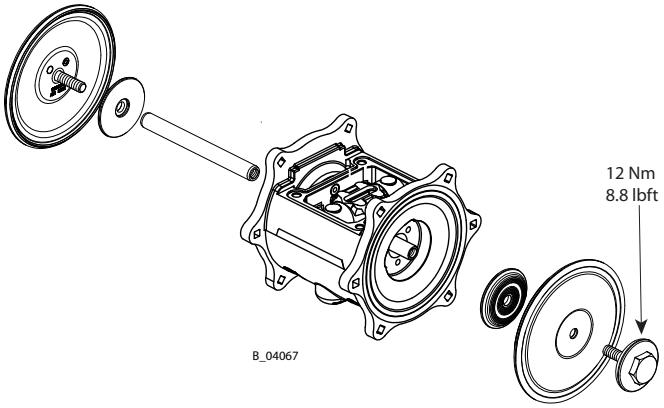

e) Lock the end of the shaft released from the diaphragm in a bench vice (provide soft jaws to avoid damaging it) and disassemble the external diaphragm disc from the opposite end of the shaft. Then remove the second diaphragm with its internal disk.
f) Assemble the new diaphragm with its internal disc and properly fasten it to the relevant external disc.
g) Remove the shaft from the bench vice and put it in the motor block. Grease the shaft inside and outside (beyond the underside of the motor block. Thereby move the shaft in different positions. See chapter 11.
h) Mount the inner diaphragm disc, the diaphragm and the outer disc and tighten them properly onto the nut of the opposite outer discs using two wrenches.
i) Attach the noise reduction and the pressure side cover. Check the correct positioning of the cover and its seal.
k) Attach the outer diaphragm cover and the manifolds. Ensure correct position of seals of the ball valves when doing so.
l) Screw on and tighten the cover screws. Tighten the manifold screws. To the directions in chapter 11 apply the right torque.

9.3 DIAPHRAGM REPLACEMENT (DUE TO BREAKAGE)

If the diaphragms are replaced as a result of breakage, all the internal parts of the motor must be cleaned and the condition of the seals and reversing valve, which may have been damaged by contact with the pump fluid, must be checked.

a) According to chapter 9.2, points a), b), c) d) and e):
Follow the disassembly procedure of the diaphragms.
b) Disassemble the reversing valve (2).
c) Remove the shaft's plastic bushings (3) located at each end of the motor block, the lip seals (4) and the feeler pins (5).
d) Clean all the components, openings and spaces within the motor block. Blow the housing cavity of the reversing valve out thoroughly with a jet of compressed air (wear safety goggles).
e) Check the condition of the reversing valve. If necessary replace.

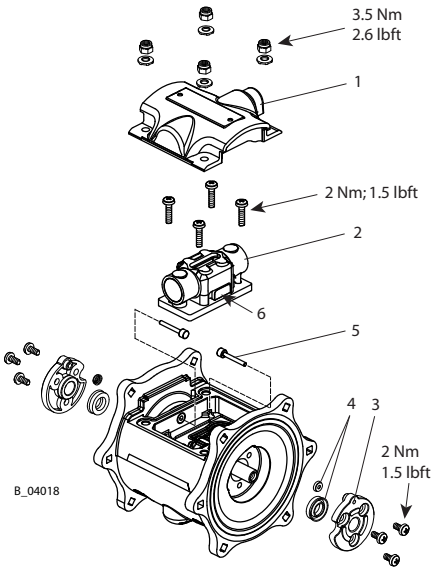

f) Grease feeler pins (5) (see chapter 11).
g) Assemble all the parts described under point c) paying attention to properly orient the seals lips (see chapter 11, exploded view).
h) Grease feeler pins (5) with lip seal (4) once more from outside
i) Put the reversing valve back in its housing. There apply the right torque. Mount the valve slider (6) on one of the stroke stop positions. There are four possible positions, each of them is suitable.
k) According to chapter 9.2, points f), g), h), i), k) and l):
Reassemble the remaining components.

9.4 CLEANING / REPLACEMENT OF THE SUCTION AND DELIVERY BALL VALVES

a) Remove the suction and delivery manifold.
b) Remove the gaskets, seats and balls from the diaphragm covers and the housings of the manifolds.
c) Check the condition of wear of the ball guide/stops inside the diaphragm covers and manifolds. Replace if worn.
d) Remove all dirt particles as well as hardened material residues. Check the ball and seats for excessive wear. Clean or replace the components.
e) Clean the contact surfaces of the manifolds and the diaphragm covers and assemble the components. To the directions in chapter 11 apply the right torque.

It is recommended that the static seals be replaced when reassembling.

9.5 REPLACEMENT OF THE REVERSING VALVE

a) Disassemble the pressure side cover and remove the reversing valve.
b) To clean it, blow the housing cavity of the reversing valve out with a jet of compressed air (wear safety goggles).
c) Put the new reversing valve in its housing. There apply the right torque (see picture in chapter 9.3). Mount the valve slider (6) on one of the stroke stop positions. There are four possible positions, each of them is suitable. Attach the pressure side cover.

During the performance of the operations described above, check the positioning of the valve's seals and cover including the seal. To the directions in chapter 11 apply the right torque.

9.6 MATERIAL HOSES

The lifetime of the fluid hoses is, even with appropriate handling, reduced due to environmental influences.

→ Check pipes, tubes, and couplings every day and replace if necessary.
→ As a precaution fluid hoses should be replaced after a period specified by the plant operator.

⚠ WARNING

Bursting hose, bursting threaded joints!
Danger to life from injection of material.

→ Ensure that the hose material is chemically resistant to the sprayed materials.
→ Ensure that the spray gun, threaded joints and material hose between the unit and the spray gun are suitable for the pressure generated in the unit.

9.7 DECOMMISIONING

When the equipment must be scrapped, please differentiate the disposal of the waste materials. The following materials have been used:

→ Steel
→ Aluminum
→ Elastomerics
→ Plastics
→ Carbide

The consumable materials (paints, adhesives, sealers, solvents) must be disposed of according to the valid specific standards.

10 ACCESSORIES

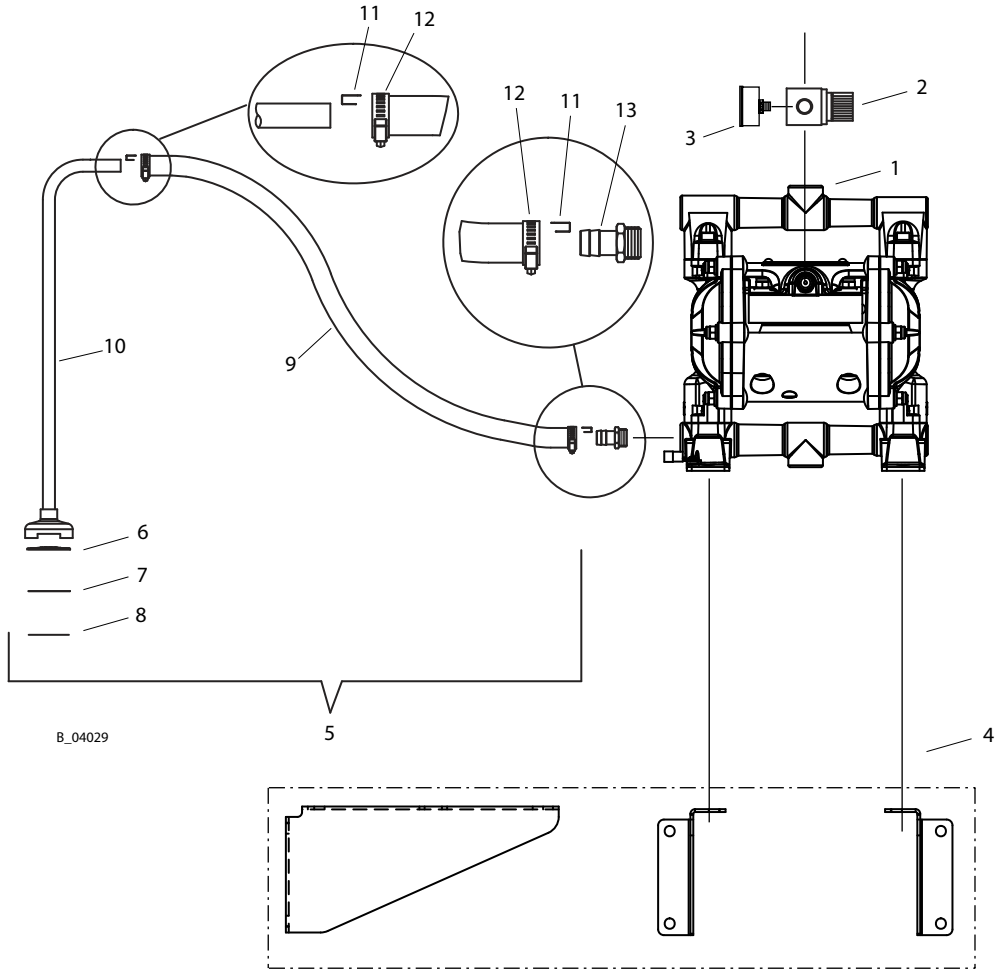

Accessory list **ZIP52 - ZIP80**		
Pos K	**Order No.**	**Description**
1	--	ZIP pump
2	P123.00	Pressure regulator
3	9998677	Pressure gauge
4	T760.00M	Wall mount
5	T406.00	Suction hose stainless steel assy.
6	H401.07	Filter support disc
7	T453.03	Suction hose filter
8	H206.03	Suction hose spring
9	S402.06A	Solvent resistant suction hose
10	T420.00	Suction pipe stainless steel
11	E0107.03	Contact clip stainless steel
12	R601.00	Hose clamp
13	B274.03	Hose fitting - stainless steel
13	M208.04	Hose fitting - nickel coated brass

Connections configurations

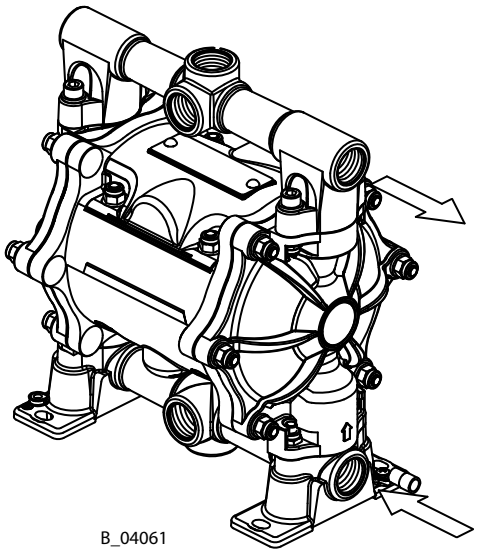

LEFT / LEFT
U55x.xxxx1

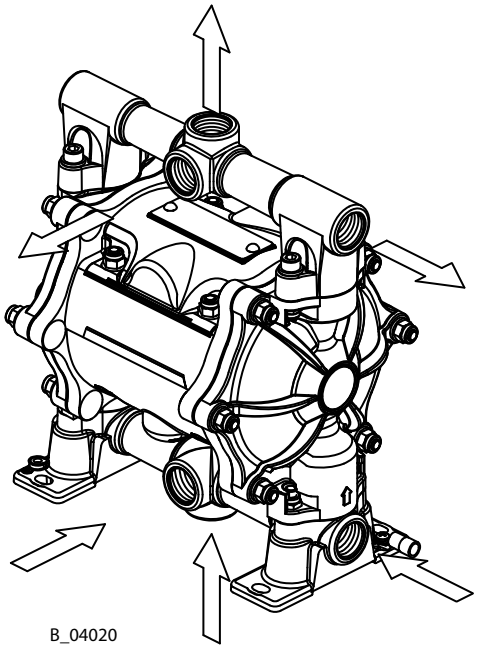

UNIVERSAL / UNIVERSAL
U55x.xxxx7
U551.303

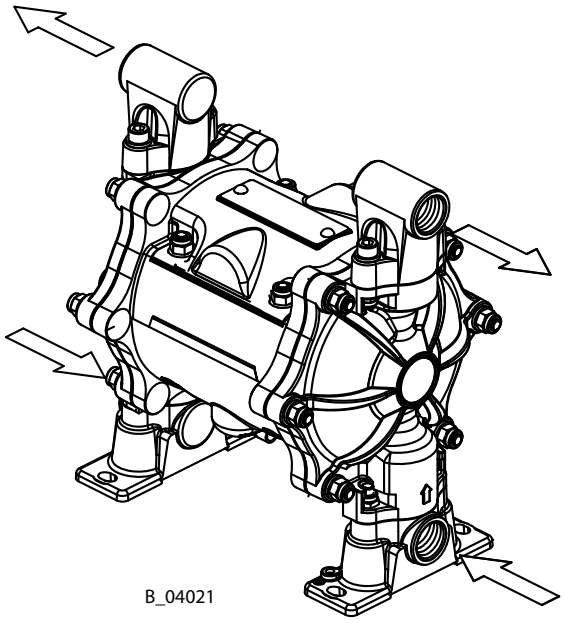

INDEPENDENT / INDEPENDENT
U55x.xxxx8

11 SPARE PARTS

11.1 HOW CAN SPARE PARTS BE ORDERED?

Always supply the following information to ensure delivery of the right spare part:

Order number, designation and quantity
The quantity need not be the same as the number given in the quantity column "**Stk**" on the list. This number merely indicates how many of the respective parts are used in each module.

The following information is also required to ensure smooth processing of your order:
- Address for the invoice
- Address for delivery
- Name of the person to be contacted in the event of any queries
- Type of delivery (normal mail, express delivery, air freight, courier)

Identification in spare parts lists

Explanation of column "**K**" (labeling) in the following spare parts lists:

◆ Wearing part
Note: No liability is assumed for wearing parts.

● Not part of standard equipment, available, however, as additional extra.

⚠ WARNING

Incorrect maintenance/repair!
Risk of injury and damage to the device.

→ Have repairs and part replacements carried out by specially trained staff or a WAGNER service center.
→ Before all work on the unit and in the event of work interruptions:
- Switch off the energy/compressed air supply.
- Relieve the pressure from the spray gun and unit.
- Secure the spray gun against actuation.
→ Observe the operating and service instructions when carrying out all work.

11.2 ZIP52 PUMP - METAL - UNIVERSAL CONNECTIONS

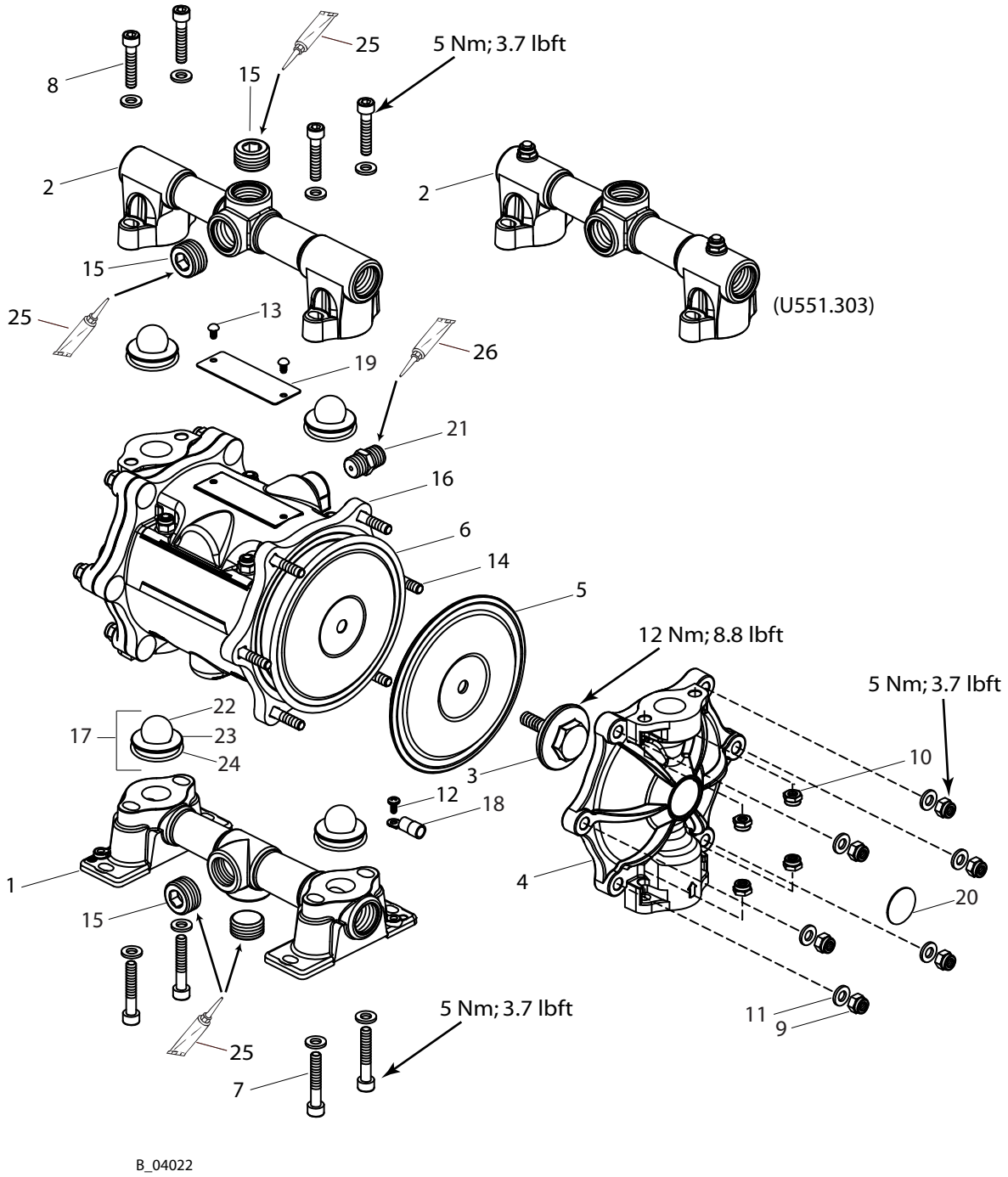

Zip52 metal - universal

			U550.ATRD7	U550.ATSS7	U550.STSS7	U551.303	U551.ATSS7	
Pos	**K**	**Stk**	**Order No.**	**Order No.**	**Order No.**	**Order No.**	**Order No.**	**Description**
		1	U550.ATRD7	U550.ATSS7	U550.STSS7	U551.303	U551.ATSS7	DDP ZIP
1		1	F184.01C	F184.01C	F188.03C	F184.01C	F184.01C	Suction manifold
2		1	F185.01C	F185.01C	F189.03C	T6133.00	F185.01C	Delivery manifold
3		2	F834.07R	F834.07R	F834.07R	F834.07R	F834.07R	Outer diaphragm disc
4		2	F978.01	F978.01	F192.03	F978.01	F978.01	Diaphragm cover
5	★ ◆	2	G921.05	G921.05	G921.05	G921.05	G921.05	Material diaphragm
6	★ ◆	2	G921.06	G921.06	G921.06	G921.06	G921.06	Support diaphragm
7		4	K142.62	K142.62	K142.62	K142.62	K142.62	Screw M6x35
8		4	K183.62	K183.62	--	K183.62	K183.62	Screw M6x30
8		4	--	--	K142.62	--	--	Screw M6x35
9		12	K311.62	K311.62	K311.62	K311.62	K311.62	Nut M6
10		8	9910204	9910204	9910204	9910204	9910204	Nut M6
11		20	9920103	9920103	9920103	9920103	9920103	Washer 6
12		1	K1012.62	K1012.62	K1012.62	K1012.62	K1012.62	Screw
13		2	K1041.62	K1041.62	K1041.62	K1041.62	K1041.62	Rivet
14		12	K1044.62	K1044.62	K1044.62	K1044.62	K1044.62	Screw
15		4	M254.14A	M254.14A	M811.03B	M254.14A	M254.14A	Plug 1/2
16		1	T6103.00	T6103.00	T6103.00	T6103.00S	T6103.00S	Motor
17	★ ◆	4	T6105.00C	T6105.00	T6105.00	T6105.00	T6105.00	Valve-unit
18		1	Y622.00A	Y622.00A	Y622.00A	Y622.00A	Y622.00A	Cable lug
19		1	--	--	--	--	--	Coverplate
20		2	--	--	--	--	--	Cover round plate
21		1	B0177.14	B0177.14	B0177.14	B0177.14A	B0177.14A	Nipples
22	★	4	K805.07D	K805.03	K805.03	K805.03	K805.03	Ball
23	★	4	B0148.07R	B0148.03A	B0148.03A	B0148.03A	B0148.03A	Ball seat
24	★ ▲	4	L206.05	L206.05	L206.05	L206.05	L206.05	O-ring
25		1	3201587	3201587	3201587	3201587	3201587	Loctite 577
26		1	9992831	9992831	9992831	9992831	9992831	Loctite 542

◆ Wearing part

★ included in service set

▲ included in product's o-ring set

11.3 ZIP52 PUMP - METAL - INDEPENDENT CONNECTIONS

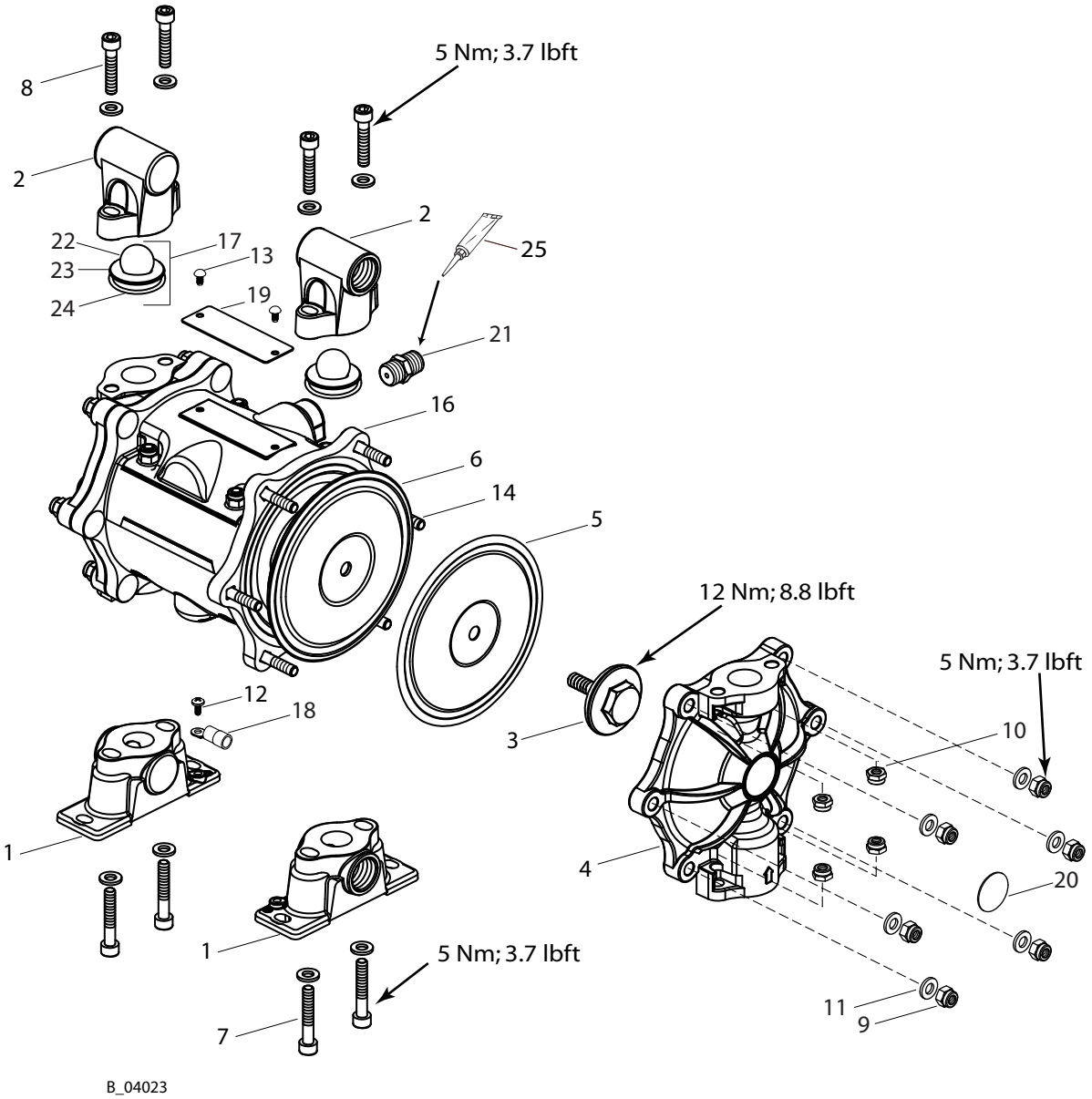

ZIP52 metallic - independent

Pos	K	Stk	Order No.	Description
		1	U550.ATSS8	DDP ZIP52
1		2	F184.01D	Suction manifold
2		2	F185.01D	Delivery manifold
3		2	F834.07R	Outer diaphragm disc
4		2	F978.01	Diaphragm cover
5	★ ◆	2	G921.05	Material diaphragm
6	★ ◆	2	G921.06	Support diaphragm
7		4	K142.62	Screw M6x35
8		4	K183.62	Screw M6x30
9		12	K311.62	Nut M6
10		8	9910204	Nut M6
11		20	9920103	Washer 6
12		1	K1012.62	Self-tapping screw
13		2	K1041.62	Rivet
14		12	K1044.62	Screw
15		--	--	--
16		1	T6103.00	Motor
17	★ ◆	4	T6105.00	Valve-unit
18		1	Y622.00A	Cable lug
19		1	--	Coverplate
20		2	- -	Cover round plate
21		1	B0177.14	Nipples
22	★	4	K805.03	Ball
23	★	4	B0148.03A	Ball seat
24	★ ▲	4	L206.05	O-ring
25		1	9992831	Loctite 542

◆ Wearing part
★ included in service set
▲ included in product's o-ring set

11.4 ZIP52 PUMP - CONDUCTIVE ACETAL

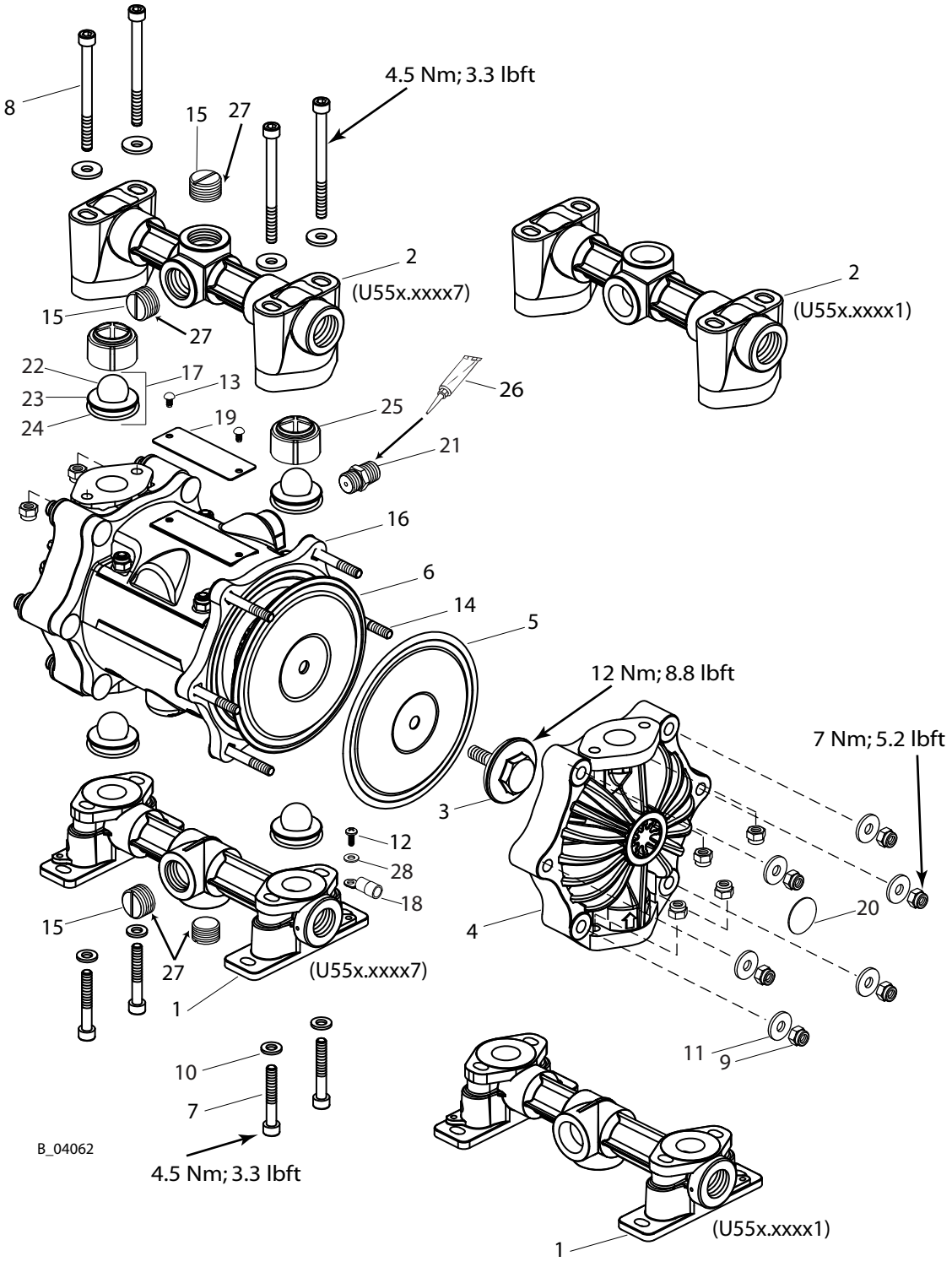

ZIP52 Conductive Acetal

			U552.GHSS1	U552.GHSS7	U553.GTSS1	
Pos	**K**	**Stk**	**Order No.**	**Order No.**	**Order No.**	**Description**
		1	U552.GHSS1	U552.GHSS7	U553.GTSS1	DDP ZIP52
1		1	--	F1017.07G-C	--	Suction manifold - universal
1		1	F833.07G-A	--	F833.07G-A	Suction manifold - left
2		1	--	F1016.07G-C	--	Delivery manifold - universal
2		1	F859.07G	--	F859.07G	Delivery manifold - left
3		2	F834.07D	F834.07D	F834.07D	Extern diaphragm disc
4		2	F831.07G-A	F831.07G-A	F831.07G-A	Diaphragm cover conductive
5	★ ◆	2	G921.07B	G921.07B	G921.05	Diaphragm
6	★ ◆	2	--	--	G921.06	Support diaphragm
7		4	K128.62	K128.62	K128.62	Screw M6x40
8		4	K1076.62	K1076.62	K1076.62	Screw M6x75
9		20	K311.62	K311.62	K311.62	Nut M6
10		4	9920103	9920103	9920103	Washer 6
11		16	K508.62	K508.62	K508.62	Washer 6x18
12		1	K1012.62	K1012.62	K1012.62	Screw
13		2	K1041.62	K1041.62	K1041.62	Rivet
14		12	K1043.62	K1043.62	K1043.62	Screw
15		4	--	M052.08	--	Plug 1/2"
16		1	T6103.00	T6103.00	T6103.00S	Motor
17	★ ◆	4	T6105.00	T6105.00	T6105.00	Valve-unit
18		1	Y622.00A	Y622.00A	Y622.00A	Cable lug
19		1	--	--	--	Coverplate
20		2	--	--	--	Cover round plate
21		1	B0177.14	B0177.14	B0177.14A	Nipples
22	★	4	K805.03	K805.03	K805.03	Ball 3/4"
23	★	4	B0148.03A	B0148.03A	B0148.03A	Seat
24	★ ▲	4	L206.05	L206.05	L206.05	O-ring
25	◆	2	F856.07D	F856.07D	F856.07D	Ball guide
26		1	9992831	9992831	9992831	Loctite 542
27		1	--	3051530	--	PTFE tape
28		1	K558.62	K558.62	K558.62	Washer

◆ Wearing part

★ included in service set

▲ included in product's o-ring set

11.45 ZIP52 PUMP - POLYPROPYLENE - UNIVERSAL CONNECTIONS

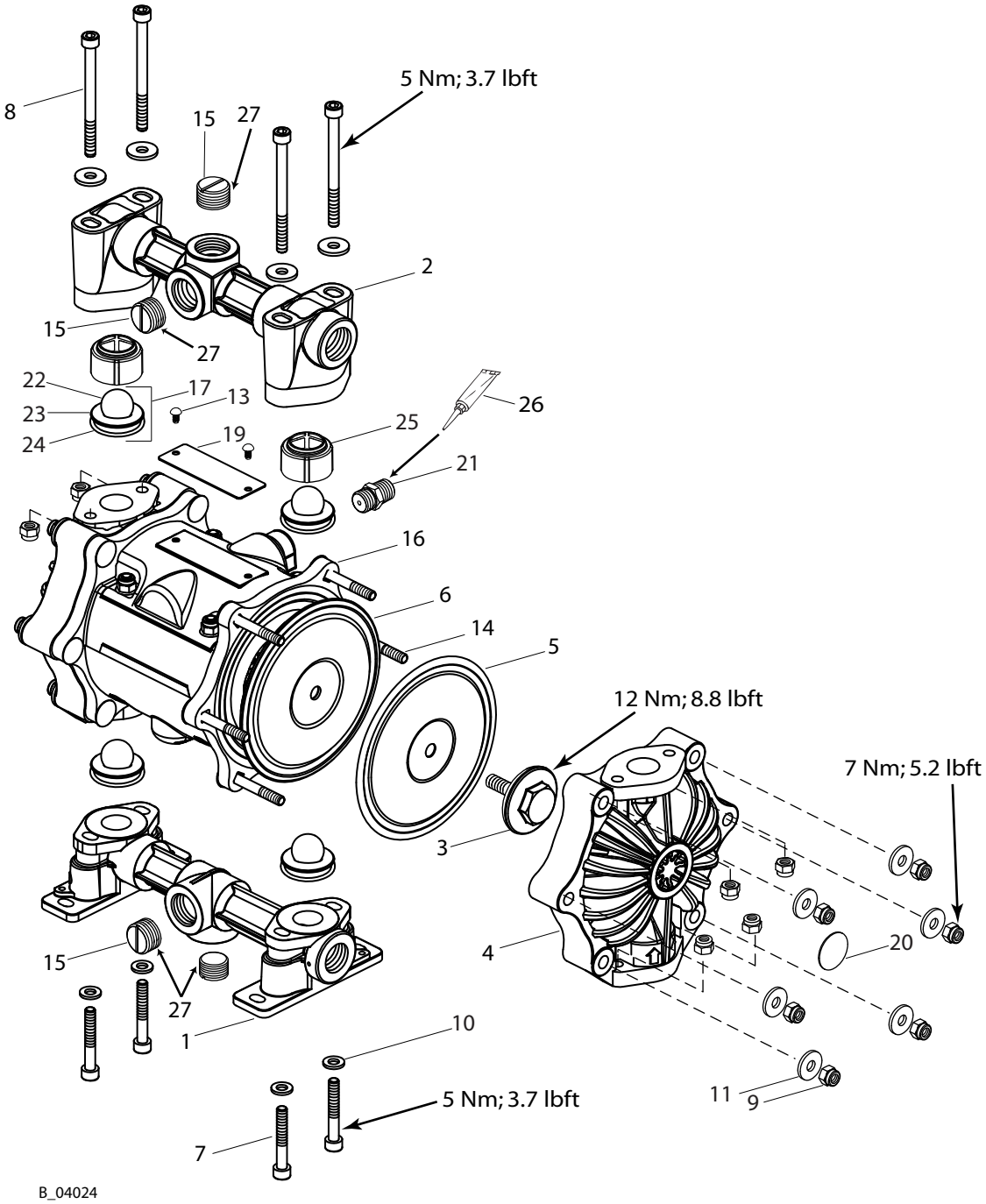

ZIP52 polypropylene - universal

			U552.PTSS7	U553.PHSD7	U553.PTSS7	
Pos	**K**	**Stk**	**Order No.**	**Order No.**	**Order No.**	**Description**
		1	U552.PTSS7	U553.PHSD7	U553.PTSS7	DDP ZIP52
1		1	F1017.07P-C	F1017.07P-C	F1017.07P-C	Suction manifold
2		1	F1016.07P-C	F1016.07P-C	F1016.07P-C	Delivery manifold
3		2	F834.07P	F834.07P	F834.07P	Outer diaphragm disc
4		2	F831.07P-A	F831.07P-A	F831.07P-A	Diaphragm cover
5	★ ◆	2	G921.05	G921.07B	G921.05	Material diaphragm
6	★ ◆	2	G921.06	--	G921.06	Support diaphragm
7		4	K128.62	K128.62	K128.62	Screw M6x40
8		4	K1076.62	K1076.62	K1076.62	Screw M6x75
9		20	K311.62	K311.62	K311.62	Nut M6
10		4	9920103	9920103	9920103	Washer 6
11		16	K508.62	K508.62	K508.62	Washer 6x18
12		--	--	--	--	--
13		2	K1041.62	K1041.62	K1041.62	Rivet
14		12	K1043.62	K1043.62	K1043.62	Screw
15		4	M052.08	M052.08	M052.08	Plug 1/2
16		1	T6103.00	T6103.00S	T6103.00S	Motor
17	★ ◆	4	T6105.00	T6105.00I	T6105.00	Valve-unit
18		--	--	--	--	--
19		1	--	--	--	Coverplate
20		2	--	--	--	Cover round plate
21		1	B0177.14	B0177.14A	B0177.14A	Nipples
22	★	4	K805.03	K805.07D	K805.03	Ball
23	★	4	B0148.03A	B0148.03A	B0148.03A	Ball seat
24	★ ▲	4	L206.05	L206.05	L206.05	O-ring
25	◆	2	F856.07P	F856.07P	F856.07P	Ball's guide insert
26		1	9992831	9992831	9992831	Loctite 542
27		1	3051530	3051530	3051530	PTFE tape

◆ Wearing part

★ included in service set

▲ included in product's o-ring set

11.6 ZIP80 PUMP - ALUMINUM - UNIVERSAL CONNECTIONS

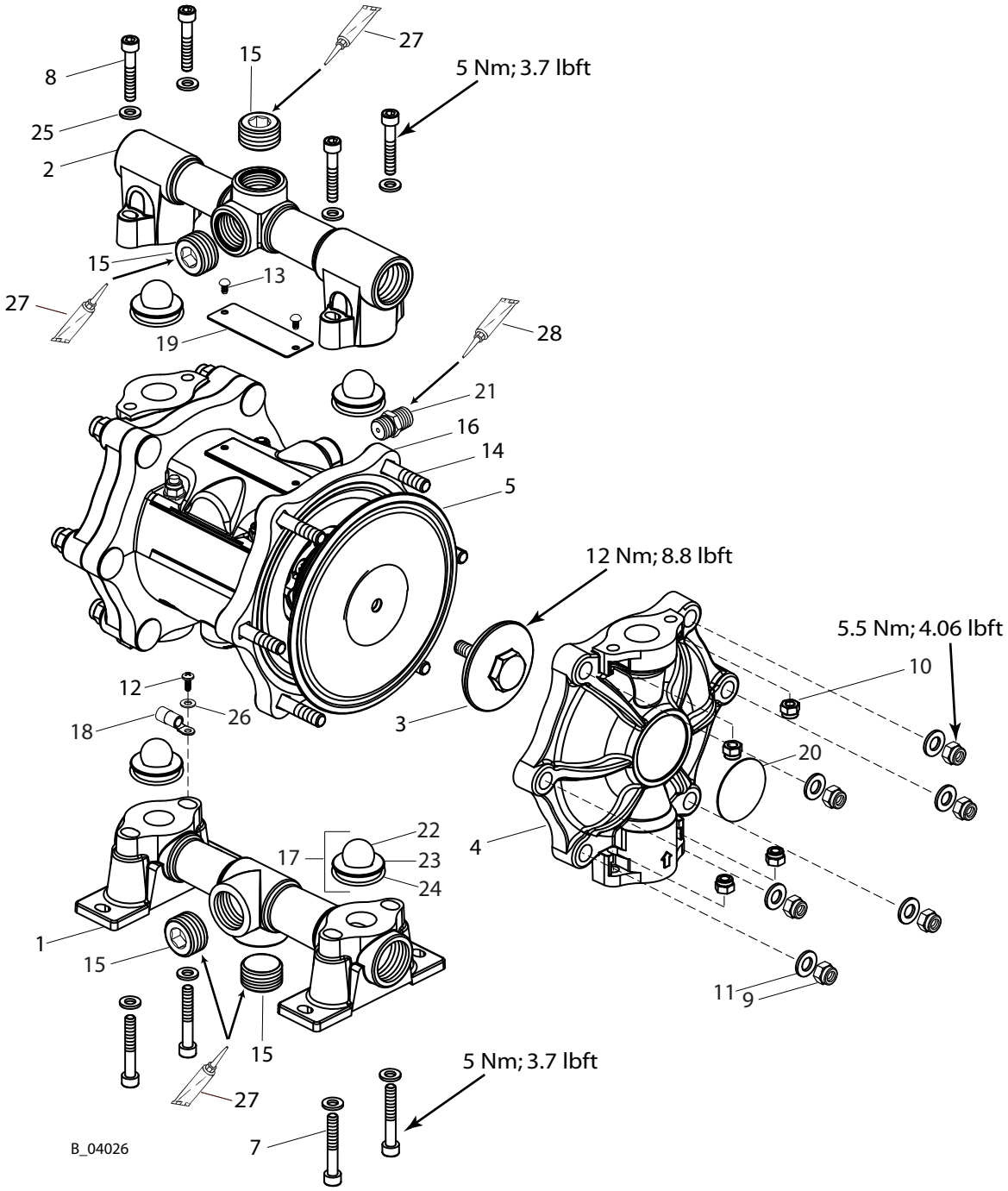

Zip 80 aluminum - universal

Pos	K	Stk	Order No.	Description
		1	U555.ATSS7	DDP ZIP80
1		1	F186.01C	Suction manifold
2		1	F187.01C	Delivery manifold
3		2	F838.07R	Outer diaphragm disc
4		2	F981.01	Diaphragm cover
5	★ ◆	2	G922.07AB	Diaphragm
6		--	--	--
7		4	K128.62	Screw M6x40
8		4	K142.62	Screw M6x35
9		12	9910208	Nut M8
10		12	K311.62	Nut M6
11		12	9920102	Washer 8
12		1	K1057.62	Screw
13		2	K1041.62	Rivet
14		12	K1053.62	Screw
15		4	M405.24	Plug 3/4
16		1	T6104.00	Motor
17	★ ◆	4	T6106.00	Valve-unit
18		1	Y622.00A	Cable lug
19		1	--	Coverplate
20		2	--	Cover round plate
21		1	B0177.14	Nipples
22	★	4	K803.03	Ball
23	★	4	B0149.03A	Ball seat
24	★ ▲	4	L208.05	O-ring
25		8	9920103	Washer 6
26		1	K558.62	Washer
27		1	3201587	Loctite 577
28		1	9992831	Loctite 542

◆ Wearing part
★ included in service set
▲ included in product's o-ring set

11.7 ZIP MOTOR

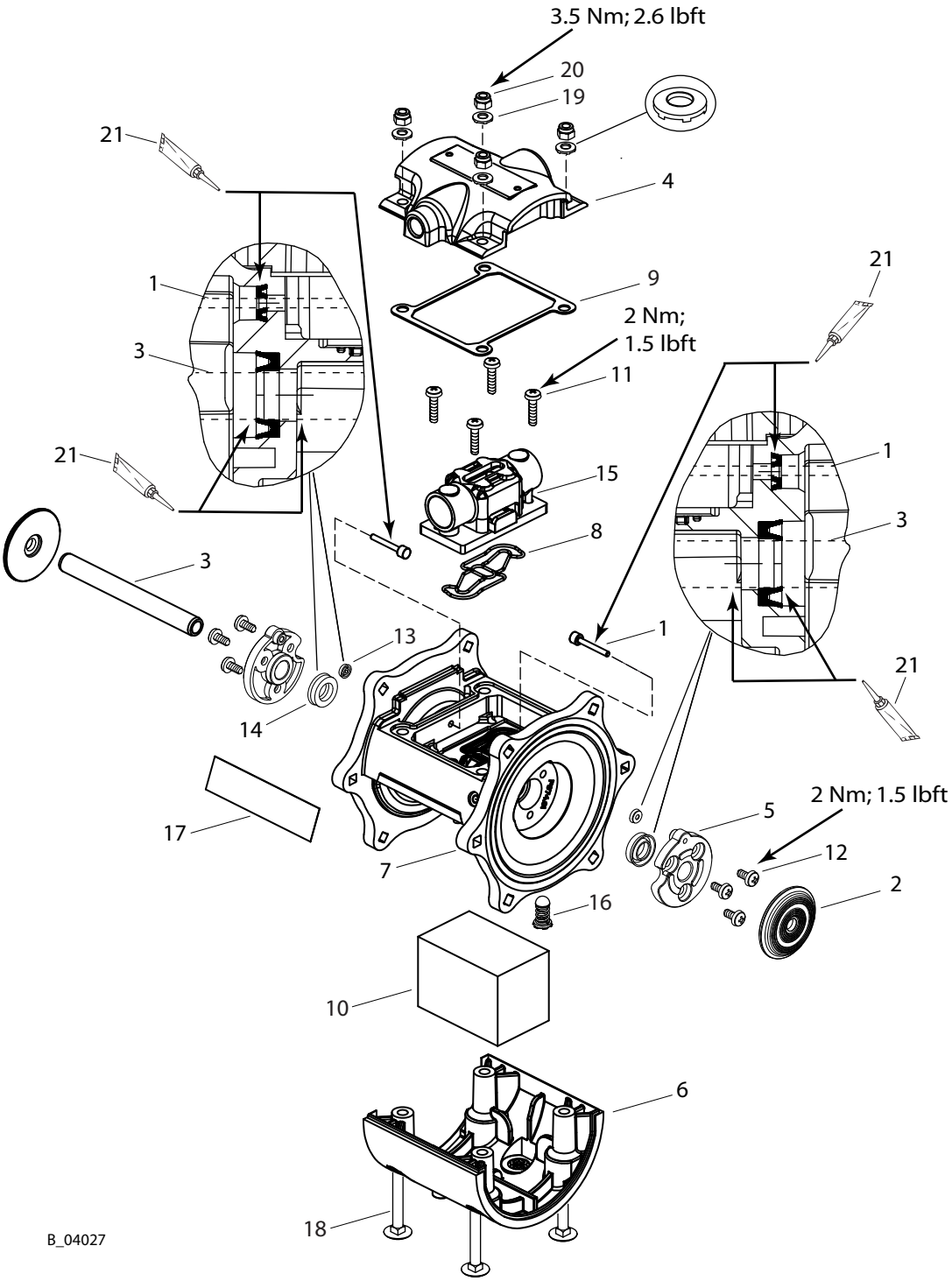

⚠ WARNING

Incorrect maintenance/repair!
Danger to life and equipment damage.

→ Only a WAGNER service center or a suitably trained person may carry out repairs and replace parts.
→ Only repair and replace parts that are listed in the chapter "Spare Parts Catalogue" and that are assigned to the unit.
→ Before all work on the unit and in the event of work interruptions:
- Disconnect the control unit from the mains.
- Relieve the pressure from the spray gun and unit.
- Secure the spray gun against actuation.
→ Observe the operating and service instructions when carrying out all work.

ZIP motor

			ZIP52	ZIP52 PF	ZIP80	
Pos	**K**	**Stk**	**Order No.**	**Order No.**	**Order No.**	**Description**
		1	T6103.00	T6103.00S	T6104.00	Motor
1		2	B0146.04	B0146.04	B0146.04	Feeler pin
2		2	B0147.71	B0147.71	B0151.71	Inner diaphragm disc
3		1	B0150.03	B0150.03S	B0150.03	Shaft
4		1	F194.91	F194.91	F194.91	Cover (pressure side)
5	★ ◆	2	F829.07	F829.07	F829.07	Shaft guide bushing
6		1	F830.07	F830.07	F830.07	Cover (exhaust side)
7		1	T6103.00A	T6103.00A	T6104.00A	Motor block with safety valve
8	◆	1	G925.06	G925.06	G925.06	Reversing valve gasket
9	◆	1	G7020.06	G7020.06	G7020.06	Pressure cover gasket
10	◆	1	H618.07	H618.07	H618.07	Noise reduction
11		4	K1038.62	K1038.62	K1038.62	Screw
12		6	K1039.62	K1039.62	K1039.62	Screw
13	★ ◆	2	L470.06	L470.06	L470.06	Lip seal
14	★ ◆	2	L471.06	L471.06	L471.06	Lip seal
15		1	P4003.00	P4003.00	P4003.00	Reversing valve (*)
16		1	See pos. 7.	See pos. 7.	See pos. 7.	Safety valve (**)
17		1	Z546.C0	Z546.C0	Z546.C0B	Side label
18		4	K1040.62	K1040.62	K1040.62	Screw
19		4	3155401	3155401	3155401	Contact washer
20		4	K311.62	K311.62	K311.62	Self-locking nut M6
21			Z125.00	Z125.00	Z125.00	High-performance grease

(*) Includes pos. 8 and 9.
(**) Not available separately

◆ Wearing part
★ included in pump's service set

11.8 SERVICE SETS

Pump No.	Diaphragm	Valve seat	Valve ball	Service set	O-ring set	Air valve set
U550.ATRD7	PTFE	PPS	Acetal (POM)	T9080.00A	T9077.00	P4003.00
U550.ATSS7	PTFE	Stainless steel	Stainless steel	T9080.00	T9077.00	P4003.00
U550.ATSS8	PTFE	Stainless steel	Stainless steel	T9080.00	T9077.00	P4003.00
U550.STSS7	PTFE	Stainless steel	Stainless steel	T9080.00	T9077.00	P4003.00
U551.ATSS7	PTFE	Stainless steel	Stainless steel	T9080.00	T9077.00	P4003.00
U551.303	PTFE	Stainless steel	Stainless steel	T9080.00	T9077.00	P4003.00
U552.GHSS1	UHMWPE	Stainless steel	Stainless steel	T9080.00B	T9077.00	P4003.00
U552.GHSS7	UHMWPE	Stainless steel	Stainless steel	T9080.00B	T9077.00	P4003.00
U552.PTSS7	PTFE	Stainless steel	Stainless steel	T9080.00	T9077.00	P4003.00
U553.GTSS1	PTFE	Stainless steel	Stainless steel	T9080.00B	T9077.00	P4003.00
U553.PHSD7	UHMWPE	Stainless steel	Acetal (POM)	T9080.00G	T9077.00	P4003.00
U553.PTSS7	PTFE	Stainless steel	Stainless steel	T9080.00	T9077.00	P4003.00
U555.ATSS7	PTFE	Stainless steel	Stainless steel	T9085.00	T9084.00	P4003.00

Service set consists of: see parts list

O-Ring set consists of:
- 4 O-rings for the valve units (material check valves)

Air valve set consists of:
- 1 Reversing valve
- 1 Reversing valve seals
- 1 Pressure cover seals

12 GUARANTEE AND CONFORMITY DECLARATIONS

12.1 IMPORTANT NOTES REGARDING PRODUCT LIABILITY

As a result of an EC regulation effective from January 1, 1990, the manufacturer shall only be liable for his product if all parts originate from him or are approved by him, and if the devices are properly mounted, operated and maintained.
The manufacturer will not be held liable or will only be held partially liable if third-party accessories or spare parts have been used.
With genuine WAGNER accessories and spare parts, you have the guarantee that all safety regulations are complied with.

12.2 GUARANTEE CLAIM

Full warranty is provided for this device:
We will at our discretion repair or replace free of charge all parts which within 36 months in single-shift, 18 months in double-shift or 9 months in triple-shift operation from date of receipt by the purchaser are found to be wholly or substantially unusable due to causes prior to the sale, in particular faulty design, defective materials or poor workmanship.
The type of warranty provided is such that the device or individual components of the device are either replaced or repaired as we see fit. The resulting costs, in particular shipping charges, road tolls, labour and material costs will be borne by us except where these costs are increased due to the subsequent shipment of the unit to a location other than the address of the purchaser.
We do not provide warranty for damage that has been caused or contributed to for the following reasons:
Unsuitable or improper use, faulty installation or commissioning by the purchaser or a third party, normal wear, negligent handling, defective maintenance, unsuitable coating products, substitute materials and the action of chemical, electrochemical or electrical agents, except when the damage is attributable to us.
Abrasive coating products such as red lead, emulsions, glazes, liquid abrasives, zinc dust paints and so forth reduce the service life of valves, packaging, spray guns, nozzles, cylinders, pistons etc. Wear and tear due to such causes are not covered by this guarantee.
Components that have not been manufactured by WAGNER are subject to the original warranty of the manufacturer.
Replacement of a component does not extend the period of warranty of the device.
The unit should be inspected immediately upon receipt. To avoid losing the warranty, we or the supplier company are to be informed in writing about obvious faults within 14 days upon receipt of the device.
We reserve the right to have the warranty compliance met by a contracting company.
The services provided by this warranty are dependent on evidence being provided in the form of an invoice or delivery note. If the examination discovers that no warranty claim exists, the costs of repairs are charged to the purchaser.
It is clearly stipulated that this warranty claim does not represent any constraint on statutory regulations or regulations agreed to contractually in our general terms and conditions.

J. Wagner AG

12.3 CE DECLARATION OF CONFORMITY

Metallic versions (aluminum and stainless steel) and **conductive Acetal**

Herewith we declare that the supplied version of the Pneumatic Double Diaphragm Pumps with ordner no.

ZIP52	ZIP52 PF	ZIP80
U550.ATRD7	U551.ATSS7	U555.ATSS7
U550.ATSS7	U551.303	
U550.ATSS8	U553.GTSS1	
U550.STSS7		
U552.GHSS1		
U552.GHSS7		

complies with the following guidelines:

2006/42/EC	94/9/EC Atex directive

Applied standards, in particular:

DIN EN ISO 12100: 2011	DIN EN 809: 2012	DIN EN ISO 4413: 2011
DIN EN ISO 4414: 2011	DIN EN 12621: 2011	DIN EN 1127-1: 2011
DIN EN ISO 13463-1: 2009	DIN EN ISO 13732-1: 2008	DIN EN 14462: 2010

Applied national technical standards and specifications, in particular:

BGR 500 part 2 chapter 2.29 and chapter 2.36	TRBS 2153

Identification:

CE Ex II 2G IIB T4 +4°C Tamb +40°C

CE Certificate of Conformity
The CE certificate of conformity is enclosed with this product. If needed, further copies can be ordered through your WAGNER dealer by specifying the product name and serial number.

Order number: 2334618

Non-metallic versions (Non-conductive polypropylene)

Herewith we declare that the supplied version of the Pneumatic Double Diaphragm Pumps with ordner no.

ZIP52	ZIP52 PF
U552.PTSS7	U553.PHSD7
	U553.PTSS7

complies with the following guidelines:

2006/42/EC

Applied standards, in particular:

DIN EN ISO 12100: 2011	DIN EN 809: 2012	DIN EN ISO 4413: 2011
DIN EN ISO 4414: 2011	DIN EN 12621: 2011	DIN EN ISO 13732-1: 2008
DIN EN 14462: 2010		

Applied national technical standards and specifications, in particular:

BGR 500 part 2 chapter 2.29 and chapter 2.36	TRBS 2153

Identification:

CE

CE Certificate of Conformity

The CE certificate of conformity is enclosed with this product. If needed, further copies can be ordered through your WAGNER dealer by specifying the product name and serial number.

Order number: 2334619

Germany J. WAGNER GmbH Otto-Lilienthal-Str. 18 Postfach 1120 D- 88677 Markdorf Telephone: +49 7544 5050 Telefax: +49 7544 505200 E-Mail: service.standard@wagner-group.com	**Switzerland** J. WAGNER AG Industriestrasse 22 Postfach 663 CH- 9450 Altstätten Telephone: +41 (0)71 757 2211 Telefax: +41 (0)71 757 2222 E-Mail: rep-ch@wagner-group.ch
Belgium WSB Finishing Equipment Veilinglaan 56/58 B- 1861 Wolvertem Telephone: +32 (0)2 269 4675 Telefax: +32 (0)2 269 7845 E-Mail: info@wsb-wagner.be / HP www.wsb-wagner.eu	**Denmark** WAGNER Industrial Solution Scandinavia Viborgvej 100, Skærgær DK- 8600 Silkeborg Telephone: +45 70 200 245 Telefax: +45 86 856 027 E-Mail info@wagner-industri.com
United Kingdom WAGNER Spraytech (UK) Ltd. Haslemere Way Tramway Industrial Estate GB- Banbury, OXON OX16 8TY Telephone: +44 (0)1295 265 353 Telefax: +44 (0)1295 269861 E-Mail: enquiries@wagnerspraytech.co.uk	**France** J. WAGNER France S.A.R.L. Parc de Gutenberg - Bâtiment F8 8, Voie la Cardon F- 91127 Palaiseau-Cedex Telephone: +33 1 825 011 111 Telefax: +33 1691 946 55 E-Mail: division.solutionsindustrielles@wagner-france.fr
Netherlands WSB Finishing Equipment B.V. De Heldinnenlaan 200 NL- 3543 MB Utrecht Telephone: +31 (0) 30 241 4155 Telefax: +31 (0) 30 241 1787 E-Mail: info@wsb-wagner.nl / HP www.wsb-wagner.eu	**Italy** WAGNER COLORA S.r.l Via Fermi, 3 I- 20875 Burago di Molgora (MB) Telephone: +39 039 625021 Telefax: +39 039 6851800 E-Mail: info@wagnercolora.com
Japan WAGNER Spraytech Ltd. 2-35, Shinden Nishimachi J- Daito Shi, Osaka, 574-0057 Telephone: +81 (0) 720 874 3561 Telefax: +81/ (0) 720 874 3426 E-Mail: marketing@wagner-japan.co.jp	**Austria** J. WAGNER GmbH Otto-Lilienthal-Str. 18 Postfach 1120 D- 88677 Markdorf Telephone: +49 (0) 7544 5050 Telefax: +49 (0) 7544 505200 E-Mail: service.standard@wagner-group.com
Sweden WAGNER Industrial Solutions Scandinavia Skolgatan 61 SE- 568 31 Skillingaryd Telephone: +46 (0) 370 798 30 Telefax: +46 (0) 370 798 48 E-Mail: info@wagner-industri.com	**Spain** WAGNER Spraytech Iberica S.A. Ctra. N- 340, Km. 1245,4 E- 08750 Molins de Rei (Barcelona) Telephone: +34 (0) 93 680 0028 Telefax: +34 (0) 93 668 0156 E-Mail: info@wagnerspain.com
Czechoslovakia WAGNER s.r.o. Nedasovská Str. 345 15521 Praha 5 - Zlicin Telephone: +42 (0) 2 579 50 412 Telefax: +42 (0)2 579 51 052 E-Mail: info@wagner.cz	**USA** WAGNER Systems Inc. 300 Airport Road, unit 1 Elgin, IL 60123 USA Telephone: +1 630 503 2400 Telefax: +1 630 503 2377 E-Mail: info@wagnersystemsinc.com

Order No. 2330426

People's Republic of China
Wagner Spraytech (Shanghai) Co., Ltd
No 58, Jiangchang (W) Rd., 1st Floor
200436 Shanghai
Tel. +86 / (0)21 6652 / 1858
Fax +86 / (0)21 6630 / 8085
www.wagner-spraytech.com.cn

Germany
J. WAGNER GmbH
Otto-Lilienthal-Str. 18
Postfach 1120
D- 88677 Markdorf
Tel. +49/ (0)7544 / 5050
Fax +49/ (0)7544 / 505200
E-mail service.standard@wagner-group.com

www.wagner-group.com